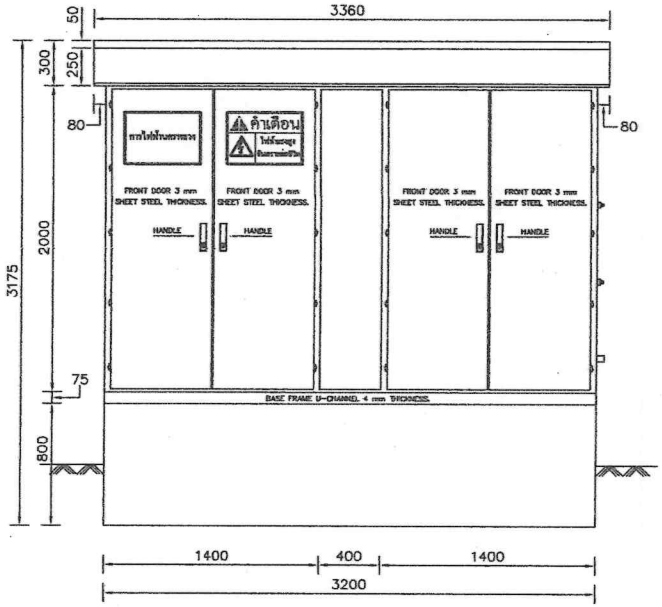

FRONT VIEW

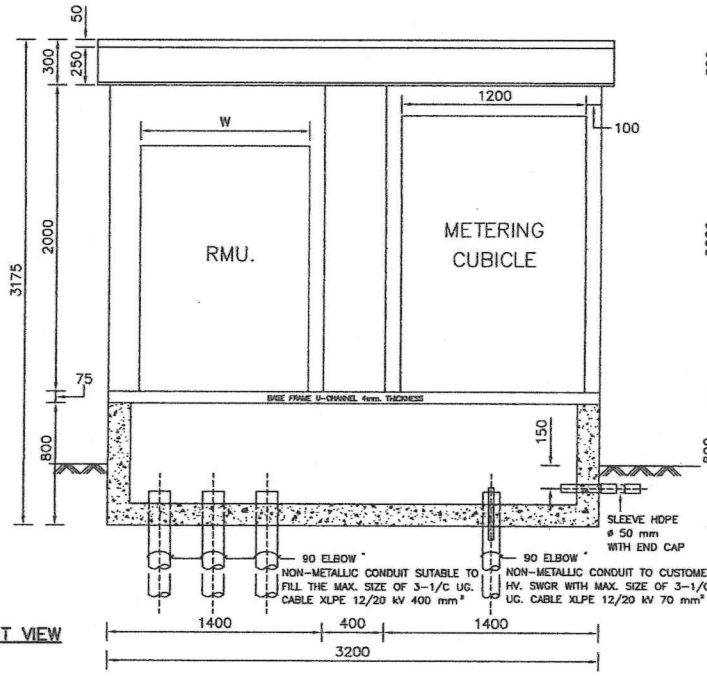

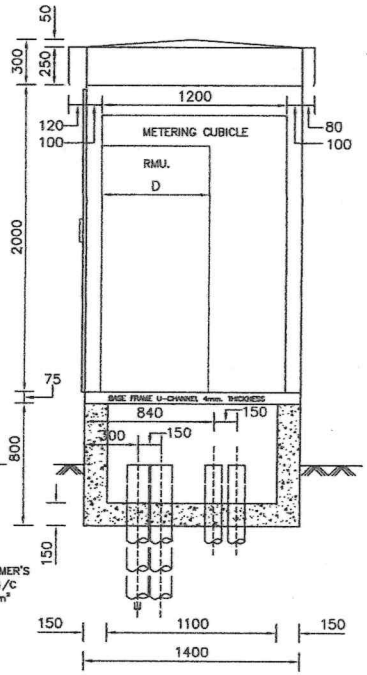

SIDE VIEW

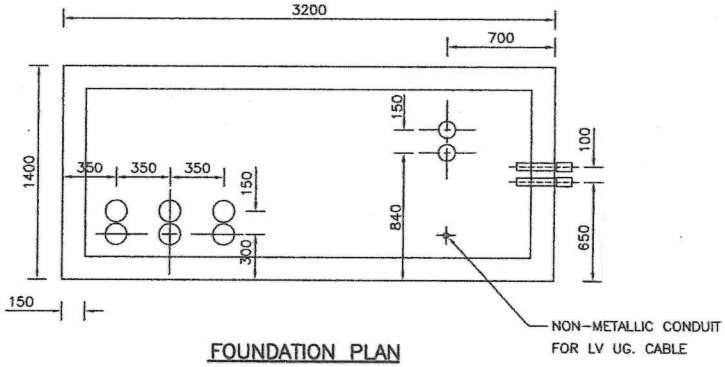

FOUNDATION PLAN

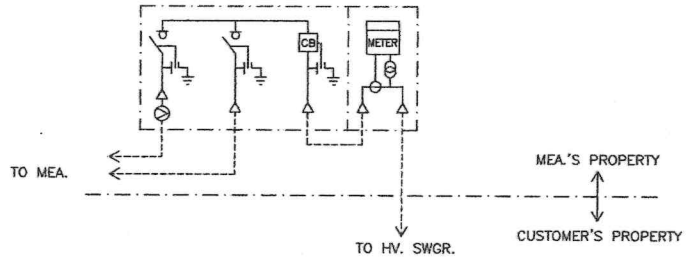

SINGLE LINE DIAGRAM

REV.NO.	DESCRIPTION OF REVISIONS	BY	DATE

METROPOLITAN ELECTRICITY AUTHORITY

POWER SYSTEM PLANNING DEPARTMENT

DR. Pravut	ENGR. Pravut	12 & 24 kV OUTDOOR ENCLOSURE FOR RING MAIN UNIT WITH METERING CUBICLE TYPE II	SCALE NONE
CHF.SEC.			SUPERSEDING
CHK.			SH.NO. 1 OF 2
DIR.DIV.			DWG. NO. 060615
DATE			

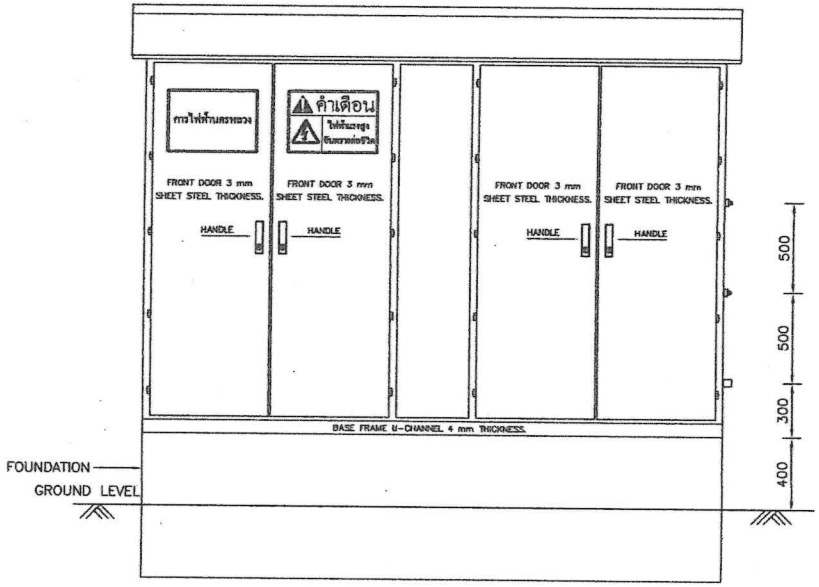

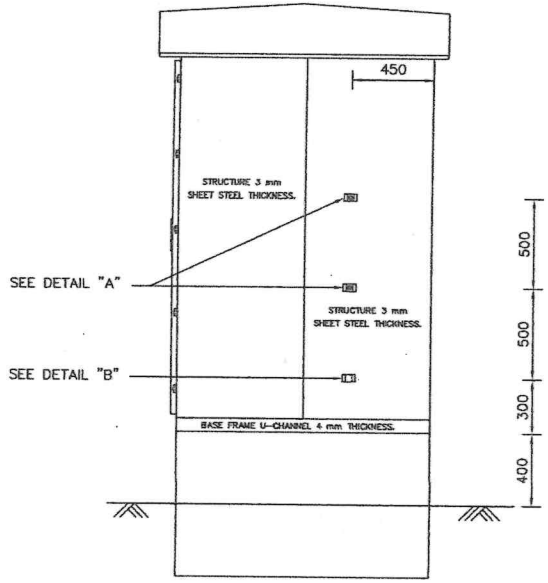

POSITIONS OF METER BOX HANGER AND CONDUIT SUPPORT

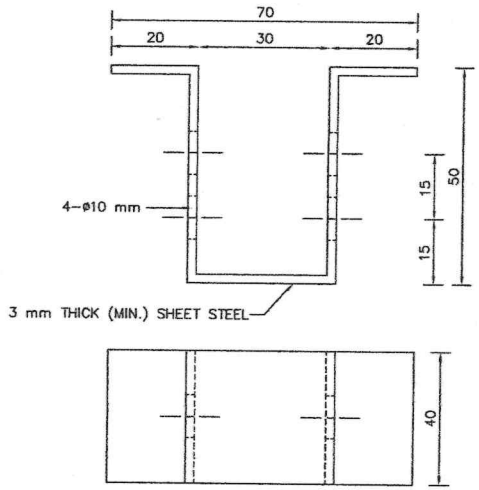

DETAIL "B"
(CONDUIT SUPPORT)

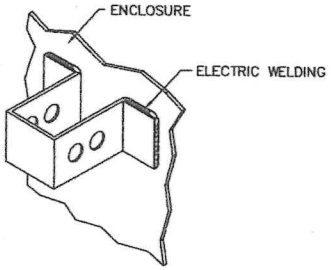

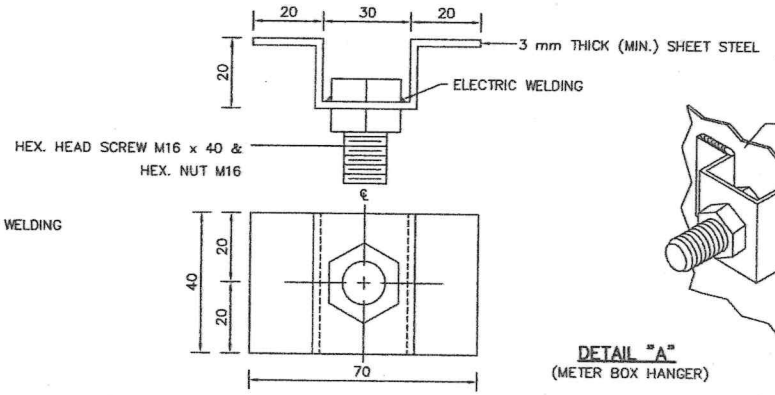

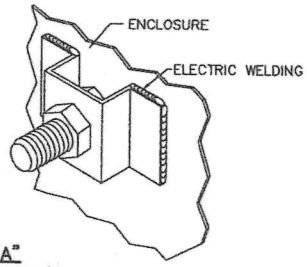

DETAIL "A"
(METER BOX HANGER)

NOTE DIMENSIONS ARE IN mm UNLESS OTHERWISE SPECIFIED.

REV.NO.	DESCRIPTION OF REVISIONS	BY	DATE

METROPOLITAN ELECTRICITY AUTHORITY

POWER SYSTEM PLANNING DEPARTMENT

DR. Pravut	ENGR. Pravut	12 & 24 kV OUTDOOR ENCLOSURE FOR RING MAIN UNIT WITH METERING CUBICLE TYPE II	SCALE NONE
CHF.SEC.			SUPERSEDING
CHK.			SH.NO. 2 OF 2
DIR.DIV.			DWG. NO. 060615
DATE			

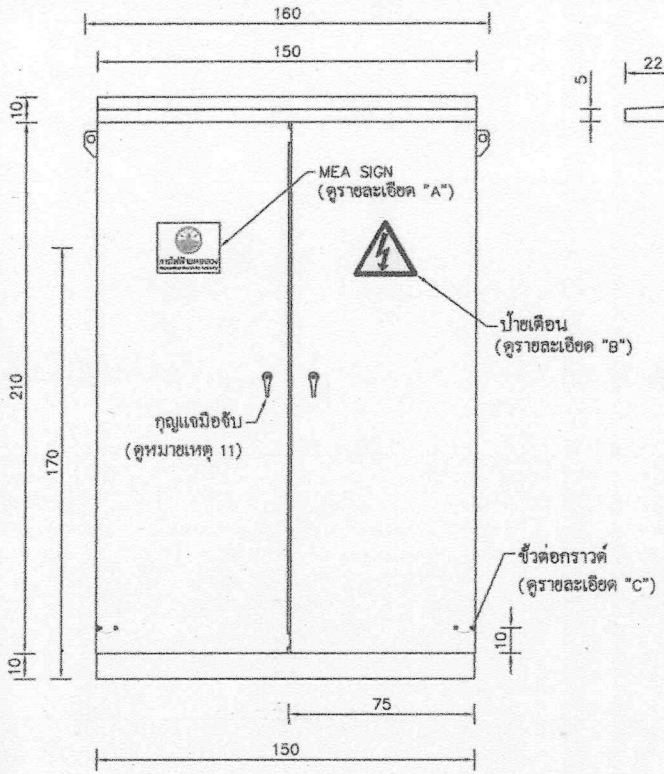

รูปด้านหน้า

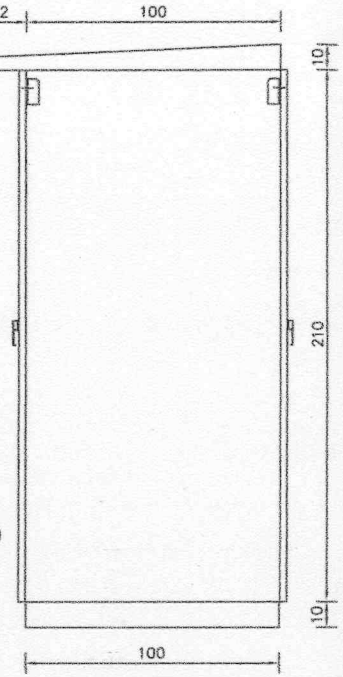

รูปด้านข้าง

หมายเหตุ

1. มิติเป็นเซนติเมตร นอกจากกำหนดให้เป็นอย่างอื่น
2. โครงสร้างภายในตู้ โครงสร้างฝาตู้และส่วนประกอบดูรายละเอียดในแผ่นที่ 2–3
3. ขนาดของตู้มีขนาดกว้าง 150 ซม.(ไม่รวมความหนาฝาด้านข้าง 2 ด้าน) มีความลึก 100 ซม.(ไม่รวมประตูหน้าตู้และประตูหลังตู้) ความสูง 210 ซม.(ไม่รวมฝาหลังคาตู้และฐานรองตู้)
4. ส่วนประกอบของตู้
   4.1 ตัวตู้ ประตู และส่วนประกอบอื่นๆ ทำจากเหล็กแผ่นรีดเย็นเคลือบสังกะสีด้วยกรรมวิธีทางไฟฟ้า (มอก. 2223) มีความหนาดังนี้
   ฝาตู้ด้านข้างหนา.....อย่างน้อย 2.5 มม.
   ประตูตู้หนา.....อย่างน้อย 2.5 มม.
   หลังคาตู้หนา.....อย่างน้อย 2.5 มม.
   โครงสร้างตู้หนา.....อย่างน้อย 3.0 มม.
   โครงสร้างฐานตู้หนา...อย่างน้อย 4.0 มม.
   4.2 โครงสร้างตู้ เหล็กรูปรางน้ำ,เหล็กฉาก วัสดุให้เป็นตาม มอก. 1227 หรือ มอก. 1228 นอกจากระบุไว้เป็นอย่างอื่น
5. เหล็กรูปรางน้ำ เหล็กฉากให้ชุบสังกะสีแบบจุ่มร้อน (HOT–DIP) ความหนาการชุบสังกะสีตาม ASTM A123/123M
6. ใช้การเชื่อมไฟฟ้าสำหรับการประกอบชิ้นส่วนของตู้
7. ฝาข้างตู้ให้ใช้การเชื่อมไฟฟ้าสำหรับการประกอบเข้ากับโครงตู้
8. ตู้เคลือบด้วยสีเทา (RAL9002) ชนิดสีพ่นอบ โดยพ่นสีรองพื้น 1 ชั้นความหนา 30 แล้วพ่นสีจริงทับอีก 2 ชั้นความหนาชั้นละ 30
9. ชิ้นส่วนประตูตู้ที่นำไฟฟ้าจะต้องฝากที่ขั้วต่อสายดิน โดยใช้สายอ่อน(FLEXIBLE)ทองแดงขนาด 35 ตร.มม.หุ้มฉนวน (หากเป็นไปได้ใช้สีเขียวแถบเหลือง) หรือสายทองแดงถักเคลือบดีบุก 1/2"x15' (รหัสพัสดุ 5970–308–41500)พร้อมหูสายทองแดงที่เหมาะสม
10. ขั้วต่อสายดินต้องขจัดสิ่งเคลือบที่ไม่เป็นตัวนำออกจากเกลียวเพื่อให้แน่ใจว่ามีความต่อเนื่องทางไฟฟ้าที่ดี และต้องสามารถนำสายทองแดงขนาด 35 ตร.มม.พร้อมหูสายทองแดงที่เหมาะสมในการต่อฝากที่ขั้วต่อสายดินได้
11. กุญแจล็อคฝาตู้ทุกบานเป็นมือจับชนิด MASTER KEY กันน้ำและวางตำแหน่งให้ CENTER ของด้ามจับอยู่กึ่งกลางของความสูงของทั้งฝาบนและล่าง (ไม่ใช่แกนกุญแจ) และความหนาประตูรวมกุญแจต้องไม่เกิน 9 ซม.
12. ประตูหน้าตู้และประตูหลังตู้ให้ใส่ขอบยางทั้งหมดพร้อมทั้งติดกาวขอบยางกันฝุ่นด้วยทุกครั้ง
13. สกรูยึดแผ่นแบกาไลท์หนา 8 มม. ใช้สกรูสแตนเลสหัวแฉกขนาด 6 มม. พร้อมแหวน ต๊าปเกลียว
14. สกรูยึดเหล็กโครงหลังคาเข้ากับโครงตู้ ใช้สกรูสแตนเลสหัวแฉกขนาด 10 มม. พร้อมแหวน ต๊าปเกลียว
15. ก้านล็อคฝาตู้ใช้เหล็กขนาด ø1/2"
16. ระดับการป้องกัน : IP54
17. ลักษณะการใช้งาน : ใช้ภายนอกอาคาร (OUTDOOR USE)

รายละเอียด "A"

(MEA SIGN STICKER)

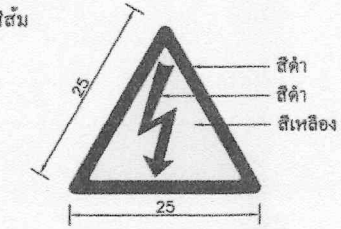

รายละเอียด "B"

(สติกเกอร์ป้ายเตือนสะท้อนแสง)

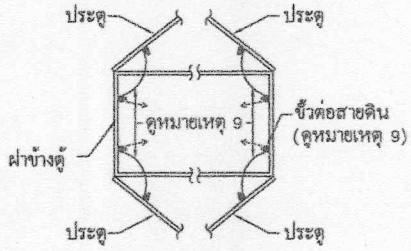

รายละเอียด "C"

REV.NO.	DESCRIPTION OF REVISIONS	BY	DATE

METROPOLITAN ELECTRICITY AUTHORITY

POWER SYSTEM PLANNING DEPARTMENT

DR. Thongchai	ENGR. Monthol	OUTDOOR ENCLOSURE FOR RING MAIN UNIT TYPE A (2–IN 1–OUT) (CODE NO.5210–682–08150)	SCALE NONE
CHF.ENGR. Monthol			SUPERSEDING DWG.NO.10A3–0277 DATE: 31/5/2561
DEP.DIV. Piyachai			SH.NO. 1 OF 3
DIR.DIV. Pakhin			DWG. NO. 10A3–0277
DATE 8/8/2565			

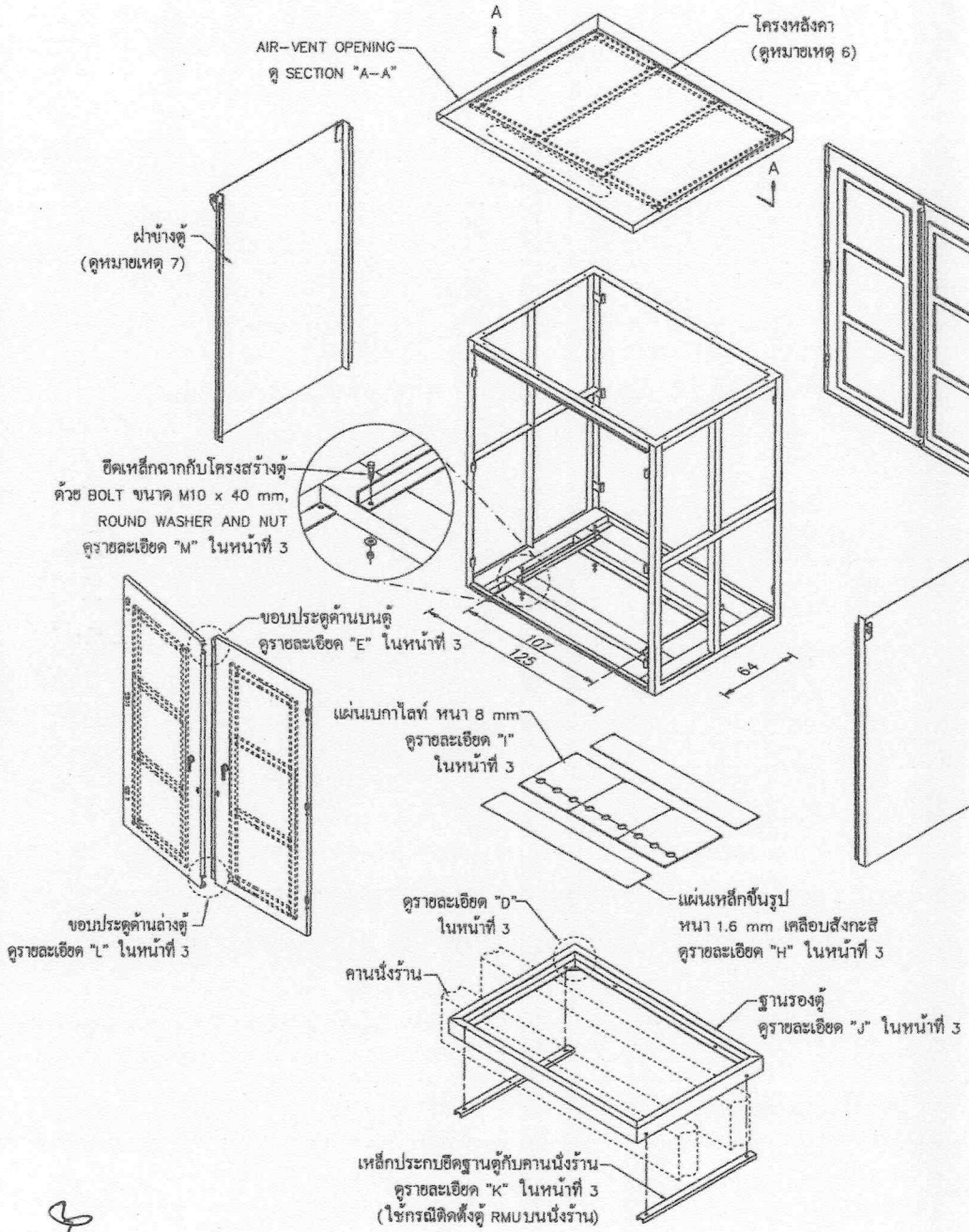

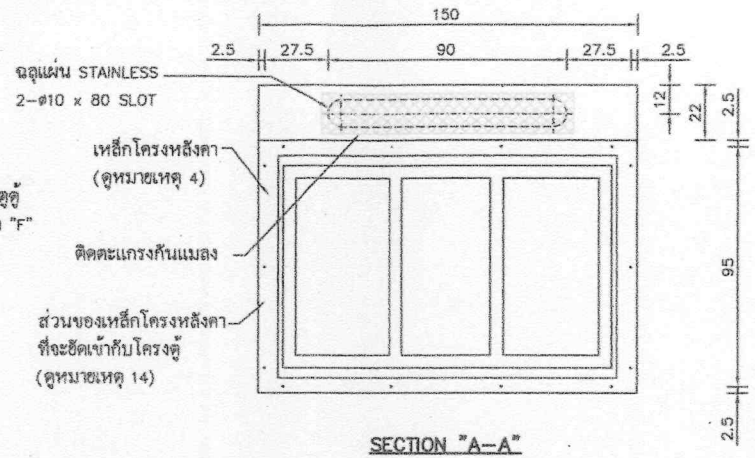

หมายเหตุ ดูหมายเหตุทั้งหมดในแผ่นที่ 1

REV.NO.	DESCRIPTION OF REVISIONS	BY	DATE

METROPOLITAN ELECTRICITY AUTHORITY

POWER SYSTEM PLANNING DEPARTMENT

DR. Thongchai	ENGR. Monthol	OUTDOOR ENCLOSURE FOR RING MAIN UNIT	SCALE NONE
CHF.ENGR. Monthol		TYPE A (2-IN 1-OUT)	SUPERSEDING DWG.NO.10A3-0277 DATE: 31/5/2561
DEP.DIV. Piyadej		(CODE NO.5210-682-00150)	SH.NO. 2 OF 3
DIR.DIV. Pakhin			DWG. NO. 10A3-0277
DATE 8/8/2565			

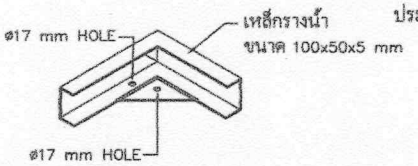

รายละเอียด "D"

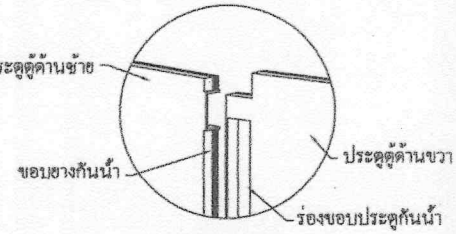

รายละเอียด "E"

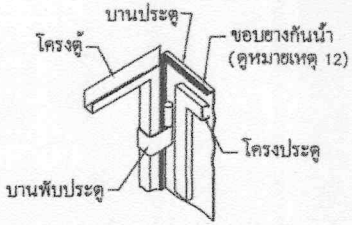

รายละเอียด "F"

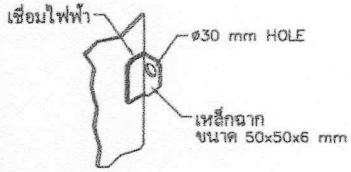

รายละเอียด "G"

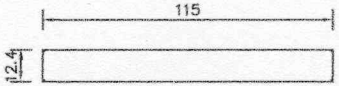

รายละเอียด "H"

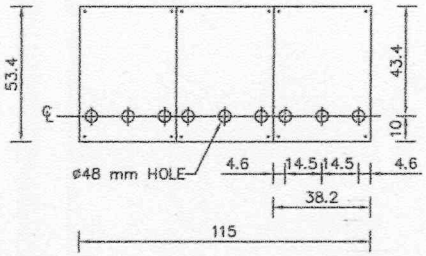

รายละเอียด "I"

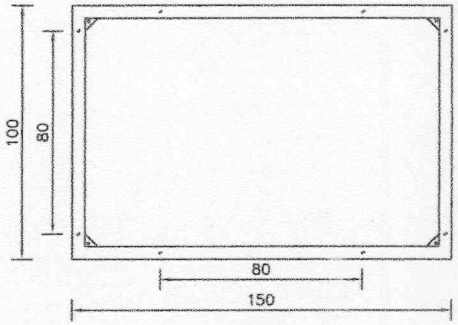

รายละเอียด "J"

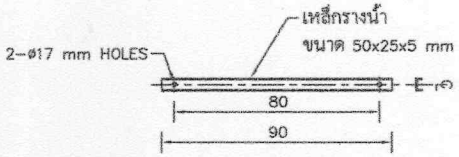

รายละเอียด "K"

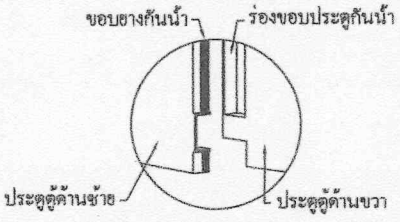

รายละเอียด "L"

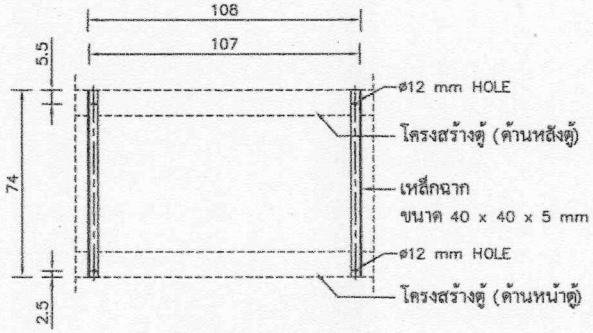

รายละเอียด "M"

หมายเหตุ ดูหมายเหตุทั้งหมดในแผ่นที่ 1

REV.NO.	DESCRIPTION OF REVISIONS	BY	DATE

METROPOLITAN ELECTRICITY AUTHORITY

POWER SYSTEM PLANNING DEPARTMENT

DR. Thongchai	ENGR. Monthol	OUTDOOR ENCLOSURE FOR RING MAIN UNIT TYPE A (2-IN 1-OUT) (CODE NO.5210-682-00150)	SCALE NONE
CHF.ENGR. Monthol			SUPERSEDING DWG.NO.10A3-0277 DATE: 31/5/2561
DEP.DIV. Pigachai			SH.NO. 3 OF 3
DIR.DIV. Pakhin			DWG. NO. 10A3-0277
DATE 8/8/2565			

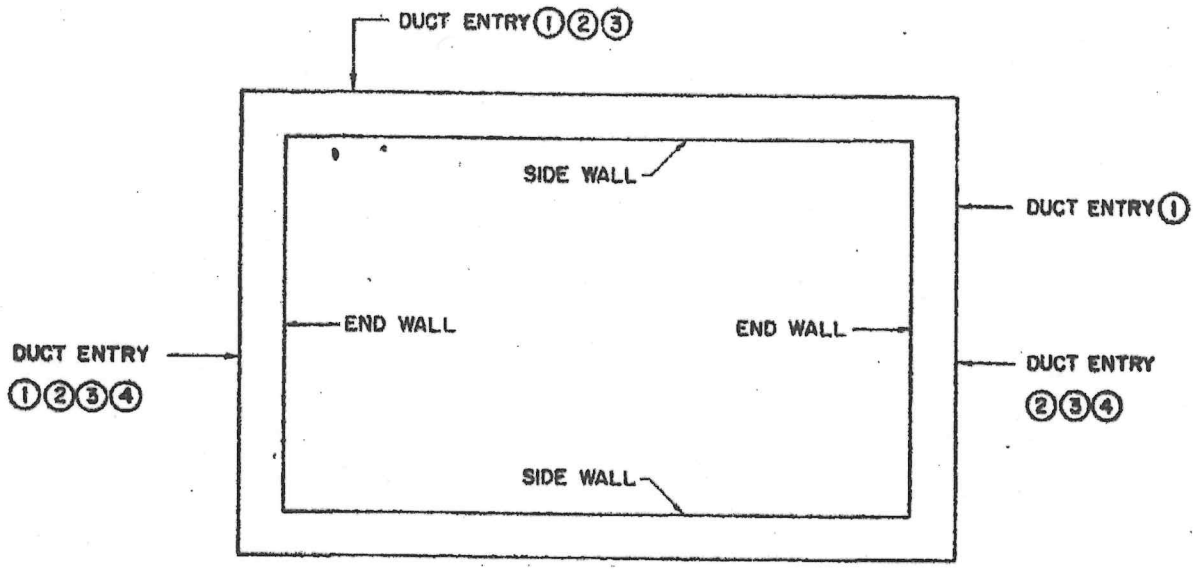

PLAN

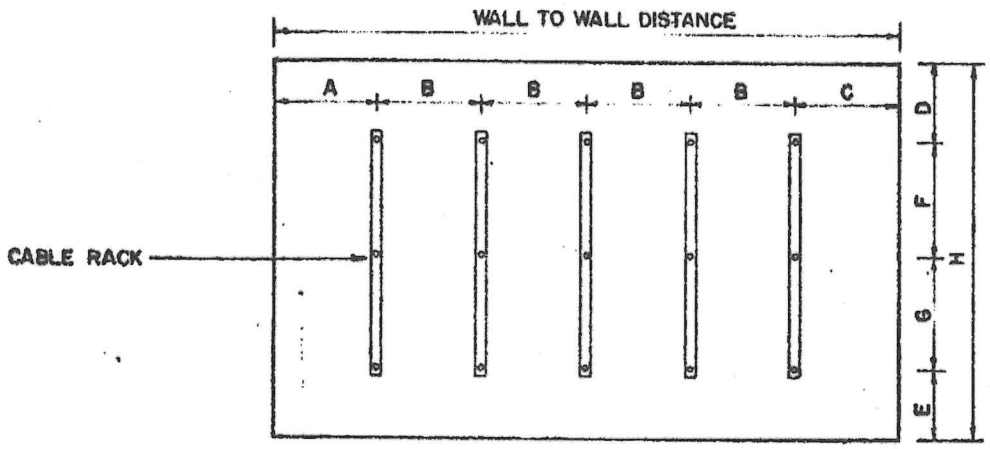

SIDE WALL TYPE I

(NO DUCT ENTRY)

NOTES

① = DUCT ENTRY FOR MANHOLE TYPE A-1 & A-1/1 & A-1/2
② = " " " " A-2 & A-2/1
③ = " " " " A-3 & A-3/1
④ = " " " " A-4 & A-4/1 & A-4/2

REV. NO.	DESCRIPTION OF REVISIONS	BY	DATE

DR.	CHK. Sombat	METROPOLITAN ELECTRICITY AUTHORITY	SCALE NONE
DIV. CHIEF Suchart B.		CABLE RACK MOUNTING LOCATIONS FOR MANHOLE TYPE A-1, A-1/1, A-1/2, A-2, A-2/1, A-3, A-3/1, A-4/1, A-4/2	SUPERSEDING 2413
EXC. MGR. T.H.			SH. NO. 1 OF 5
DTY. GEN. MGR.			DWG. NO. UG-2-100
DATE 31/3/2530			

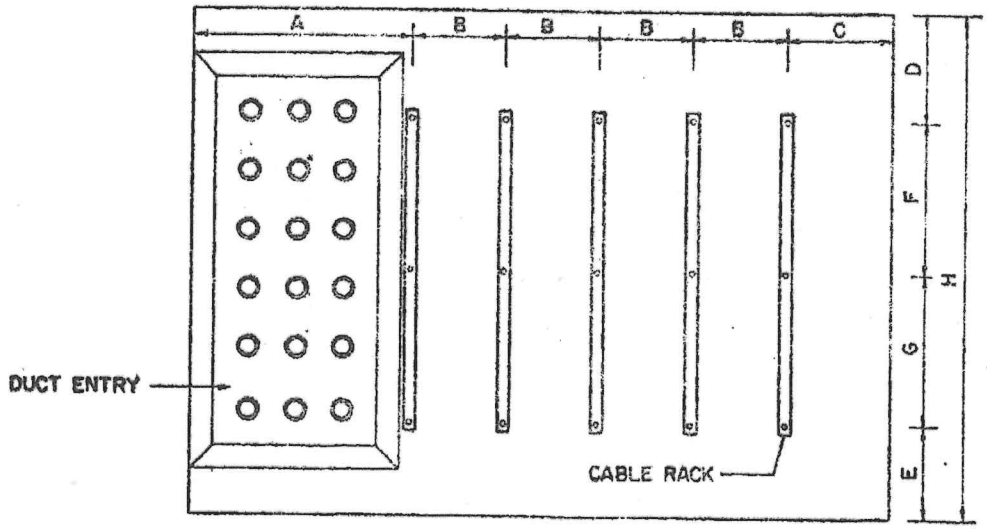

SIDE WALL TYPE 2

(DUCT ENTRY NEAR CORNER)

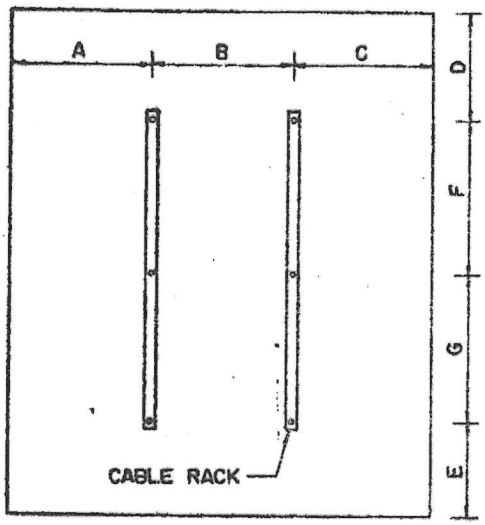

END WALL TYPE 1

(NO DUCT ENTRY)

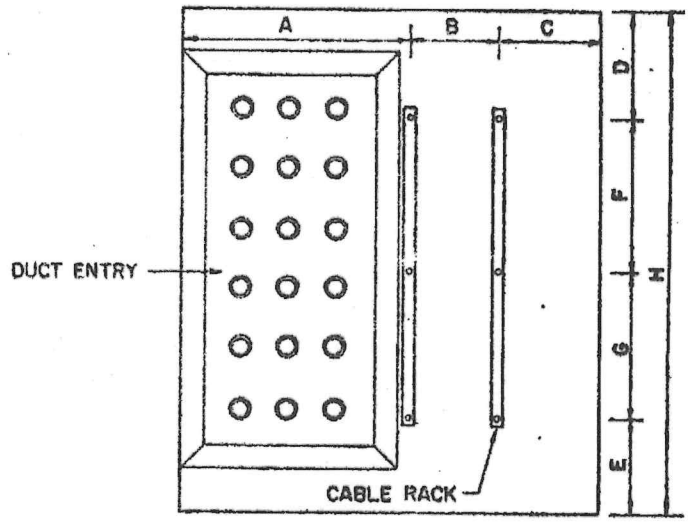

END WALL TYPE 2

(DUCT ENTRY NEAR CORNER)

REV. NO.	DESCRIPTION OF REVISIONS	BY	DATE.

DR	CHK. Sombat	METROPOLITAN ELECTRICITY AUTHORITY	SCALE NONE
DIV. CHIEF Suchart P.		CABLE RACK MOUNTING LOCATIONS FOR MANHOLE TYPE	SUPERSEDING 2413
EXC. MGR. T.H.			SH. NO. 2 OF 5
DTY. GEN. MGR.			DWG. NO. UG-2-100
DATE 31/3/2530		A-1, A-1/1, A-1/2, A-2, A-2/1, A-3, A-3/1, A-4/1, A-4/2	

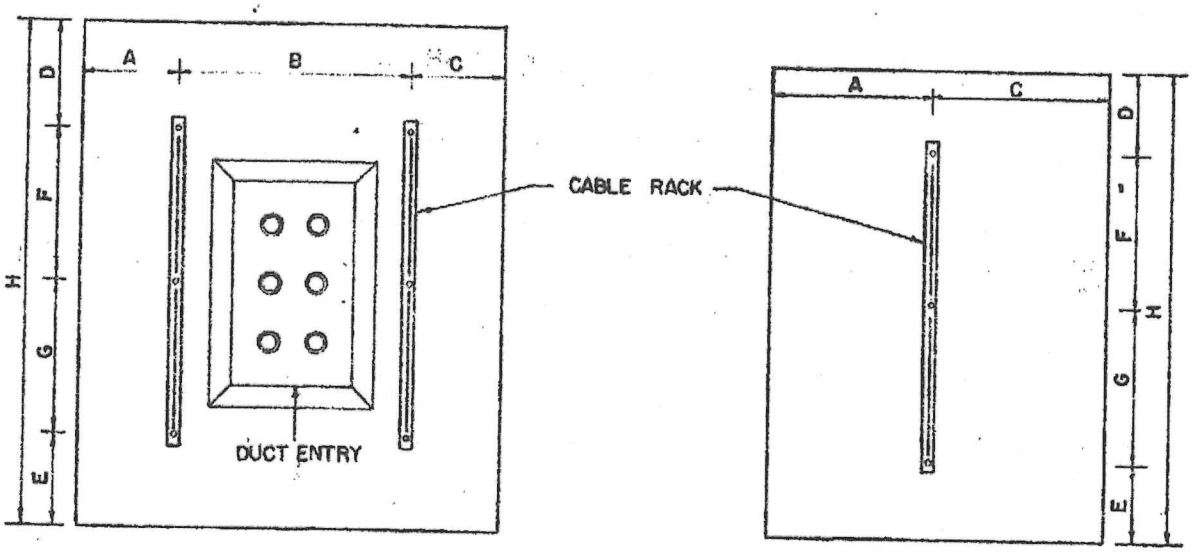

END WALL TYPE 3
(CENTER DUCT ENTRY)

END WALL TYPE 4
(NO DUCT ENTRY)

REV. NO.	DESCRIPTION OF REVISIONS	BY	DATE

DR.	CHK. Sunhart	METROPOLITAN ELECTRICITY AUTHORITY
DIV. CHIEF	Suchart B.	CABLE RACK MOUNTING LOCATIONS FOR MANHOLE TYPE A-1, A-1/1, A-1/2, A-2, A-2/1, A-3, A-3/1, A-4/1, A-4/2
EXC. MGR.	T.H.	
DTY. GEN. MGR.	Bangnit	
DATE	31/3/2530	

SCALE	NONE
SUPERSEDING	2413
SH. NO.	3 OF 5
DWG. NO.	UG-2-100

TABLE A

FOR RACKING SINGLE CONDUCTOR CABLES

CABLE RACK LOCATION (DIMENSIONS ARE IN CM.)											
MANHOLE TYPES	SIDE WALL LOCATION										
	SIDE WALL TYPES	NUMBER OF CABLE RACK POSITIONS	DIMENSIONS								REMARKS
			A	B	C	D	E	F	G	H	
A-1	1	5	90	45	90	45	40	65	65	215	
	2	5	95	45	85	45	40	65	65	215	
A-1/1	1	5	90	45	90	45	40	65	65	215	
A-1/2	2	5	95	45	85	45	40	65	65	215	
A-2	1	5	70	45	70	35	35	65	65	200	
	2	4	95	45	90	35	35	65	65	200	
A-2/1	1	5	70	45	70	35	35	65	65	200	
	2	4	95	45	90	35	35	65	65	200	
A-3	1	2	90	95	90	25	30	65	65	185	
	2	2	95	90	90	25	30	65	65	185	
A-3/1	1	2	90	95	90	25	30	65	65	185	
	2	2	95	90	90	25	30	65	65	185	
A-4/1	1	7	70	45	70	45	40	65	65	215	
A-4/2	2	6	95	45	90	45	40	65	65	215	

REV. NO.	DESCRIPTION OF REVISIONS	BY	DATE

DR.	CHK. Sombat	METROPOLITAN ELECTRICITY AUTHORITY
DIV. CHIEF Suchart B.		CABLE RACK MOUNTING LOCATIONS FOR MANHOLE TYPE A-1, A-1/1, A-1/2, A-2, A-2/1, A-3, A-3/1, A-4/1, A-4/2
EXC. MGR. T.H.		
DTY. GEN. MGR. Bangsuk		
DATE 31/3/2530		

SCALE
SUPERSEDING 2413
SH. NO. 4 OF 5
DWG. NO. UG-2-100

TABLE B

FOR RACKING SINGLE CONDUCTOR CABLES

CABLE RACK LOCATION (DIMENSIONS ARE IN CM.)											
MANHOLE TYPES	END WALL LOCATION										
	END WALL TYPES	NUMBER OF CABLE RACK POSITIONS	DIMENSIONS								REMARKS
			A	B	C	D	E	F	G	H	
A - 1	1	2	60	60	60	45	40	65	65	215	
	2	2	95	40	45	45	40	65	65	215	
	3	2	40	100	40	45	40	65	65	215	
	4	-	-	-	-	-	-	-	-	-	
A - 1/1 A - 1/2	1	2	60	60	60	45	40	65	65	215	
	2	2	95	40	45	45	40	65	65	215	
	3	2	40	100	40	45	40	65	65	215	
	4	-	-	-	-	-	-	-	-	-	
A - 2	1	-	-	-	-	-	-	-	-	-	
	2	1	95	0	55	35	35	65	65	200	
	3	2	35	80	35	35	35	65	65	200	
	4	1	75	0	75	35	35	65	65	200	
A - 2/1	1	-	-	-	-	-	-	-	-	-	
	2	1	95	0	55	35	35	65	65	200	
	3	2	35	80	35	35	35	65	65	200	
	4	1	75	0	75	35	35	65	65	200	
A - 3	1	-	-	-	-	-	-	-	-	-	
	2	1	95	0	55	25	30	65	65	185	
	3	2	35	80	35	25	30	65	65	185	
	4	1	75	0	75	25	30	65	65	185	
A - 3/1	1	-	-	-	-	-	-	-	-	-	
	2	1	95	0	55	25	30	65	65	185	
	3	2	35	80	35	25	30	65	65	185	
	4	1	75	0	75	25	30	65	65	185	
A - 4/1 A - 4/2	1	2	60	60	60	45	40	65	65	215	
	2	2	95	40	45	45	40	65	65	215	
	3	2	40	100	40	45	40	65	65	215	
	4	-	-	-	-	-	-	-	-	-	

REV. NO.	DESCRIPTION OF REVISIONS	BY	DATE

DR.	CHK. Sombat	METROPOLITAN ELECTRICITY AUTHORITY
DIV. CHIEF Suchart B.		CABLE RACK MOUNTING LOCATIONS FOR MANHOLE TYPE A-1, A-1/1, A-1/2, A-2, A-2/1, A-3, A-3/1, A-4/1, A-4/2
EXC. MGR. T.H.		
DTY. GEN. MGR.		
DATE 31/3/2530		

SCALE	
SUPERSEDING 2413	
SH. NO. 5 OF 5	
DWG NO.	UG-2-100

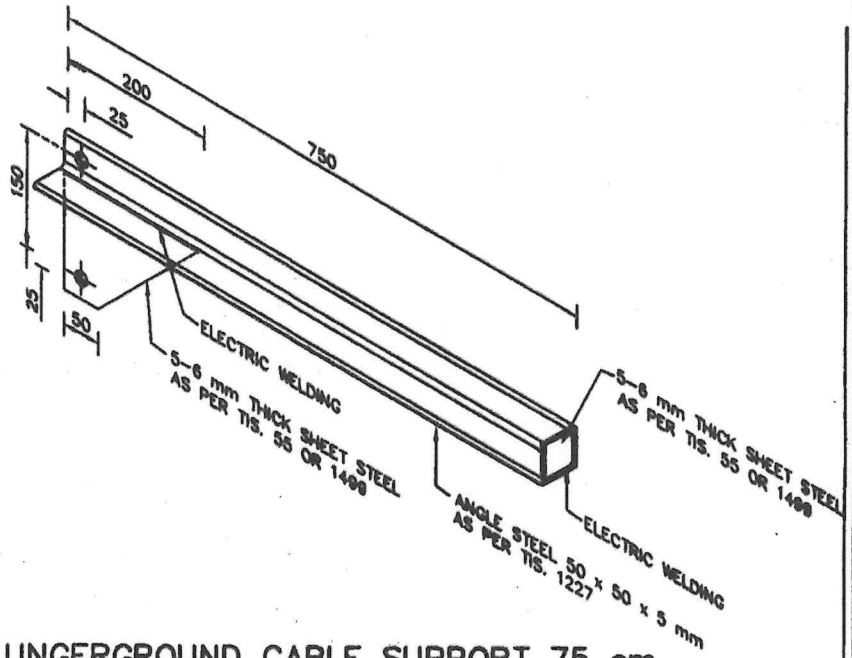

UNGERGROUND CABLE SUPPORT 75 cm

(CODE NO. 6145-268-02000)

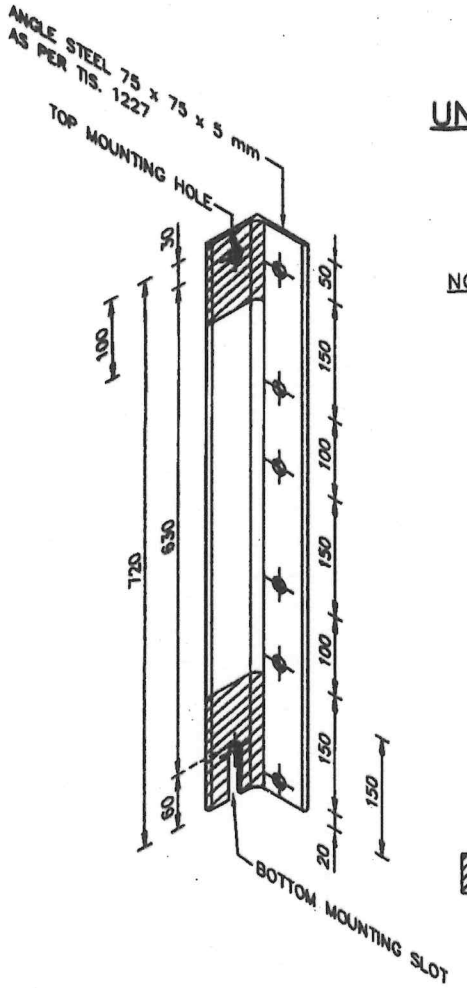

NOTES

1. DIMENSIONS ARE IN mm
2. ALL HOLES SHALL BE ø18 mm
3. AFTER FABRICATION, THE CABLE RACK SUPPORT SHALL BE GALVANIZED BY HOT-DIP PROCESS. THE MINIMUM AVERAGE THICKNESS OF ZINC-COATING AS PER ASTM A123/123M.

ASPHALT/BITUMINOUS PAINT

UNGERGROUND CABLE RACK 72 cm

(CODE NO. 6145-268-01500)

1	REVISED DRAWING & TITLE	Pongsan	23/1/52
REV.NO.	DESCRIPTION OF REVISIONS	BY	DATE

DR. Pornchai	CHK. Pongsan	METROPOLITAN ELECTRICITY AUTHORITY	SCALE NONE
DIR.DIV.		CABLE RACK SUPPORT FOR SUPPORTING UG CABLE	SUPERSEDING 10A4-0526
DIR.DEPT.			SH.NO. 1 OF 1
DEP.GOV.			DWG. NO. UG-8-014
DATE 6/6/2551			

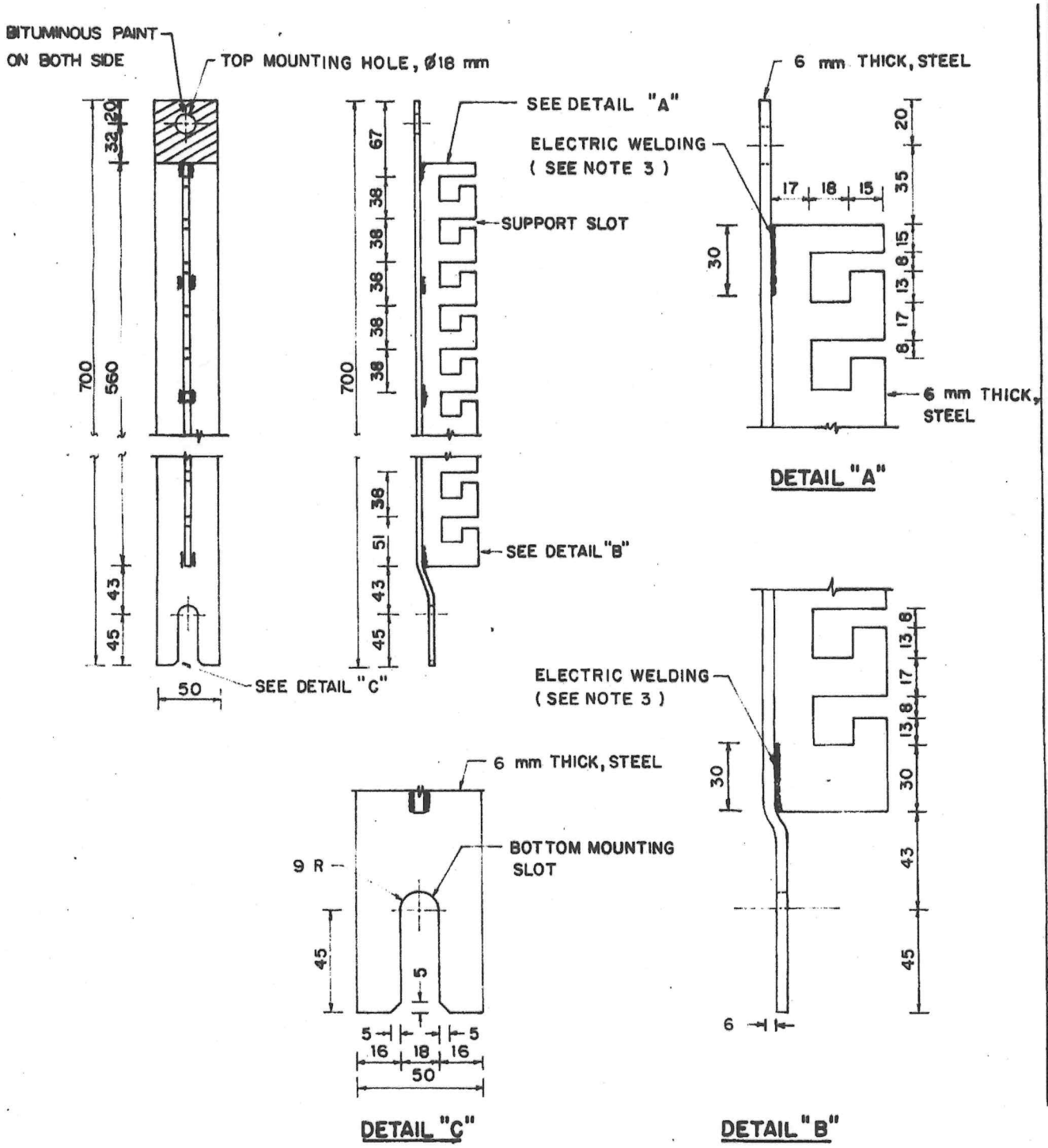

14-HOLE UG. CABLE RACK

(CODE NO. 6145-268-014000)

NOTES

1. DIMENSIONS ARE IN mm.
2. MATERIAL SHALL BE GALVANIZED BY HOT-DIP PROCESS AFTER FABRICATION. THE MINIMUM AVERAGE THICKNESS OF ZINC-COATING AS PER ASTM A123/123M.
3. ELECTRIC WELDING SHALL BE MADE ON BOTH SIDES AT APPROX. 10 CM. INTERVALS.

REV. NO.	DESCRIPTION OF REVISIONS	BY	DATE
2	ADDED BITUMINOUS PAINT AROUND TOP MOUNTING HOLE AND REVISED DIMENSIONS, CODE NO. & NOTE 2	Pongsan	23/1/52
1	REVISED STEEL THICKNESS AND DRAWING	Sombat	11/1/33

DR.	CHK. Sombat	METROPOLITAN ELECTRICITY AUTHORITY	SCALE NONE
DIV. CHIEF Suchart R.		UNDERGROUND CABLE RACK	SUPERSEDING
EXC. MGR. T.H.			SH. NO. 1 OF 1
DTY. GEN. MGR. Bongsid			DWG NO. UG-8-011
DATE 14/5/2530			

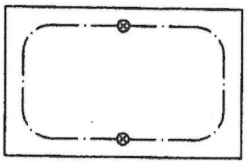

MANHOLE TYPE A

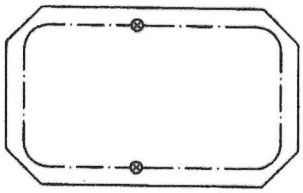

MANHOLE TYPE B

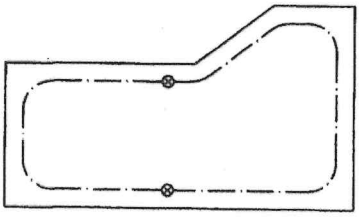

MANHOLE TYPE L

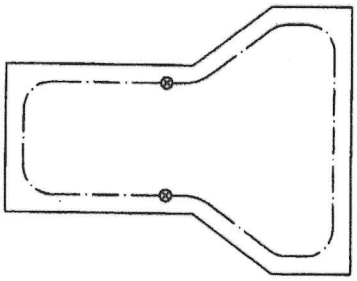

MANHOLE TYPE T

⊗ = GROUND ROD COPPER–CLAD ø5/8" x 8 ft

—·—·— = GROUND LOOP, CONDUCTOR SIZE : 35 mm² (CU) PVC INSULATED FOR ONLY 12 OR 24 kV CABLE JOINTS IN MANHOLE
: 95 mm² (CU) PVC INSULATED FOR ONLY 69 OR 115 kV CABLE JOINTS IN MANHOLE
: 95 mm² (CU) PVC INSULATED FOR MIXED 69 OR 115 kV AND 12 OR 24 kV CABLE JOINTS IN MANHOLE

GROUND LOOP IN VARIOUS TYPE OF MANHOLES

NOTE GROUND LOOP IN HANHOLE IS NOT REQUIRED.

REV.NO.	DESCRIPTION OF REVISIONS	BY	DATE

DR. Pornchai	CHK. Pongsan	METROPOLITAN ELECTRICITY AUTHORITY	SCALE NONE
DIR.DIV. Chuchart		GROUND LOOP IN MANHOLE	SUPERSEDING UG-2-200 SH.NO.1
DIR.DEPT. Surachai			SH.NO. 1 OF 1
DEP.GOV.			DWG. NO. UG-10-005
DATE 9/9/2551			

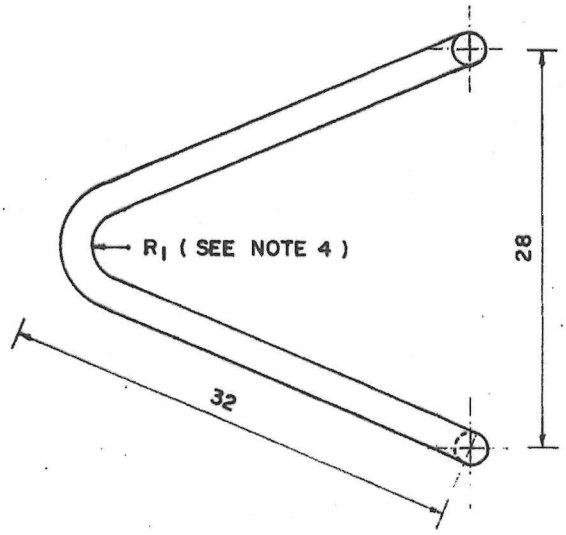

TOP VIEW

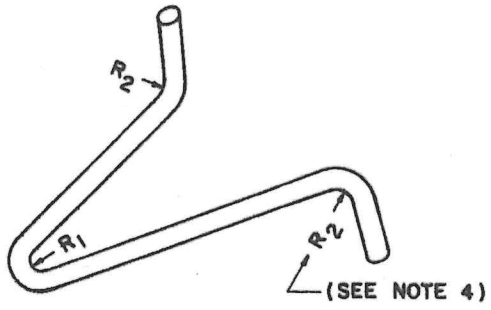

ISOMETRIC VIEW

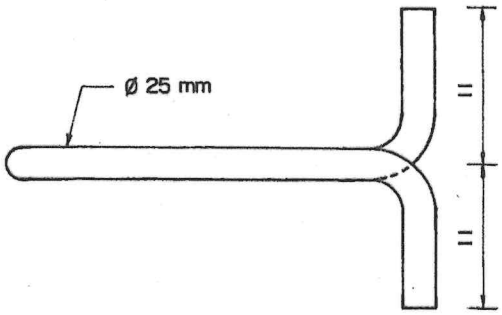

FRONT VIEW

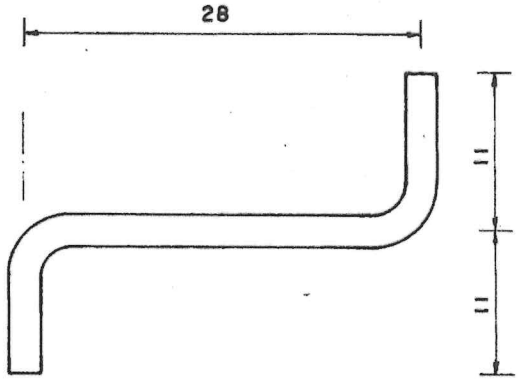

SIDE VIEW

PULLING IRON

(CODE NO. 5615-044-81200)

NOTES.

1. DIMENSIONS ARE IN cm UNLESS OTHERWISE SPECIFIED.
2. MATERIAL: Ø25 mm STEEL ROUND BAR. (SR. 24, TIS. 20)
3. PULLING IRON SHALL BE HOT-DIP GALVANIZED AFTER FORMING. THE MINIMUM AVERAGE OF ZINC-COATING AS PER ASTM A123/123M.
4. THE BENDING RADIUS SHALL BE AS FOLLOWS:

   R_1 = 30 ± 5 mm

   R_2 = 22 ± 1 mm
5. MINIMUM RESISTING PULLING TENSION OF THE PULLING IRON SHALL NOT BE LESS THAN 3000 kg.

REV. NO.	DESCRIPTION OF REVISIONS	BY	DATE
1	CHANGED SIZE OF STEEL ROUND BAR FROM Ø22 mm TO Ø25 mm AND REVISED NOTES	Pongsan	23/1/52

DR. Apichart T. / CHK. Somkiat	METROPOLITAN ELECTRICITY AUTHORITY	SCALE NONE
DIV. CHIEF Suchart B.	PULLING IRON FOR MANHOLE AND HANDHOLE	SUPERSEDING 2901
EXC. MGR. T.H.		SH. NO. 1 OF 1
DTY. GEN. MGR. Bongrit		DWG NO. UG-8-012
DATE 14/5/2530		

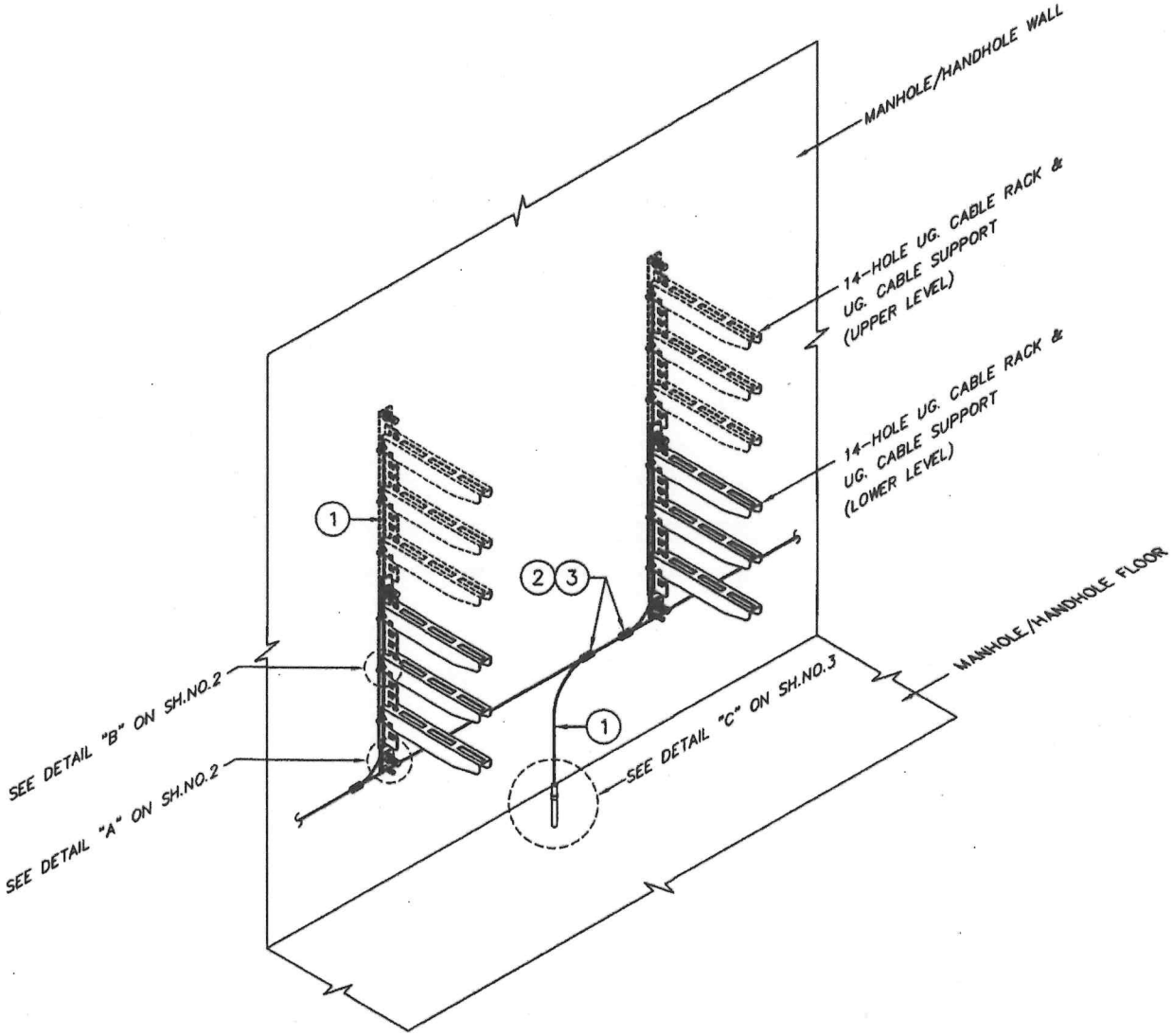

GROUNDING PRACTICE FOR CABLE RACKS IN 12/24 kV MANHOLE/HANDHOLE

NOTE

THE DRAWING DOES NOT ILLUSTRATE GROUNDING DETAILS FOR SPLICED CABLE. IF THERE ARE UG. CABLE SPLICES IN MANHOLE, SEE MORE GROUNDING PRACTICE IN DWG.NO. UG-10-006

REV.NO.	DESCRIPTION OF REVISIONS	BY	DATE

DR. Monthol	CHK. Pongsan	METROPOLITAN ELECTRICITY AUTHORITY	SCALE NONE
DIR.DIV. Chuchart		GROUNDING PRACTICE FOR CABLE RACK IN 12/24 kV MANHOLE/HANDHOLE	SUPERSEDING
DIR.DEPT. Jurachai			SH.NO. 1 OF 3
DEP.GOV.			DWG. NO. UG-10-007
DATE 9/9/2551			

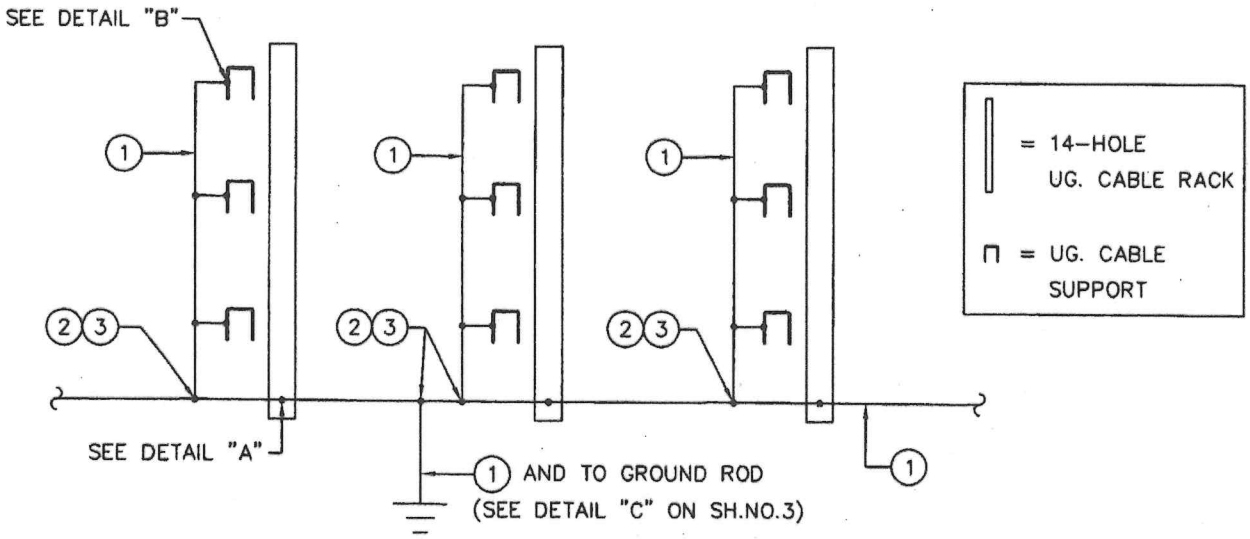

GROUNDING DIAGRAM

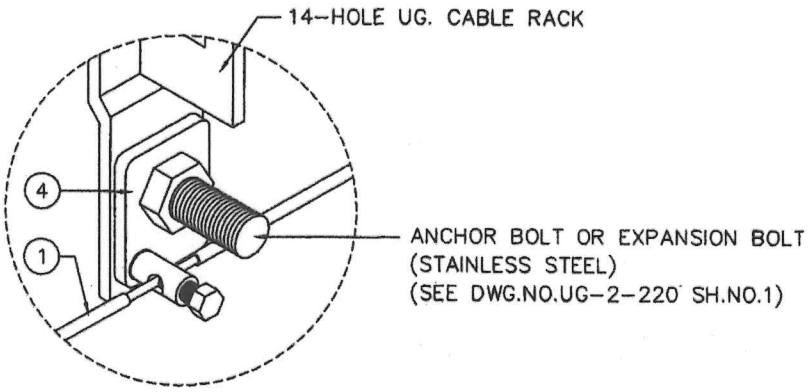

DETAIL "A"
(STEEL GROUND TERMINAL ASSEMBLY)

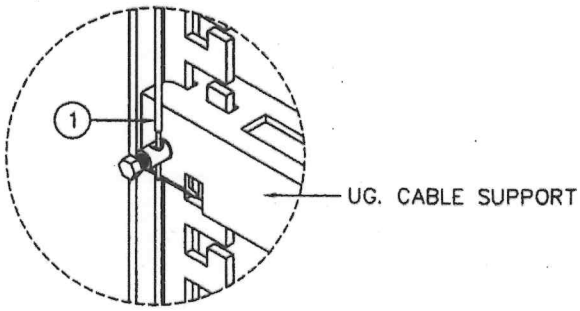

DETAIL "B"
(GROUND TERMINAL OF UG. CABLE SUPPORT)

REV.NO.	DESCRIPTION OF REVISIONS	BY	DATE

DR. Monthol	CHK. Pongsan	METROPOLITAN ELECTRICITY AUTHORITY	SCALE NONE
DIR.DIV. Chuchart		GROUNDING PRACTICE FOR CABLE RACK IN 12/24 kV MANHOLE/HANDHOLE	SUPERSEDING
DIR.DEPT. Jurachai			SH.NO. 2 OF 3
DEP.GOV.			DWG. NO. UG-10-007
DATE 9/9/2551			

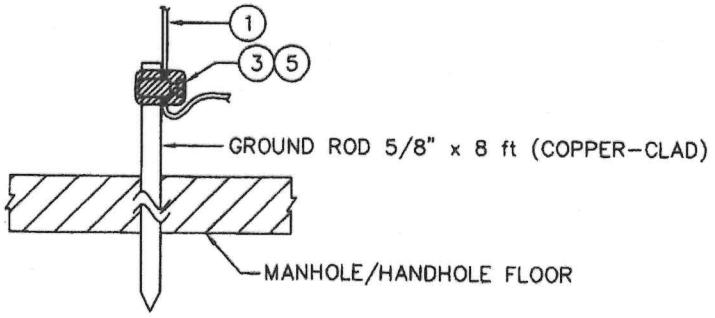

DETAIL "C"
(CONNECTION TO GROUND ROD)

BILL OF MATERIAL			
ITEM NO.	CODE NO.	REQ'D	DESCRIPTION
1	6145-201-01600	AS REQ'D	GROUND WIRE, CU COND. PVC INSULATED MEA TYPE A 16 mm²
2	6145-063-60100		CONNECTOR, COMPRESSION TYPE(CU), C-FRAME 10-16 mm² R & 16 mm² T
3	5970-316-62900		EPR TAPE 3/4" x 30 ft
4	6145-123-00200		STEEL GROUND TERMINAL 45 x 60 x 6 mm
5	6145-092-15300		CLAMP, GROUND ROD 5/8" FOR 16-35 mm² GROUND WIRE

REV.NO.	DESCRIPTION OF REVISIONS	BY	DATE

DR. Monthol	CHK. Pongsan	METROPOLITAN ELECTRICITY AUTHORITY	SCALE NONE
DIR.DIV. Chuchart		GROUNDING PRACTICE FOR CABLE RACK IN 12/24 kV MANHOLE/HANDHOLE	SUPERSEDING
DIR.DEPT. Surachai			SH.NO. 3 OF 3
DEP.GOV.			DWG. NO. UG-10-007
DATE 9/9/2551			

ALLOWABLE AMPACITIES IN AMPERES
FOR CABLE RATED U_0/U = 12/20 kV IN DUCT BANK (CONCRETE ENCASED)
INSTALLATION METHOD

AMBIENT EARTH TEMPERATURE = 30 °C
NATIVE SOIL THERMAL RESISTIVITY = 1.0 K·m/W (AVERAGE)
CONCRETE THERMAL RESISTIVITY = 1.0 K·m/W

DEPTH OF LAYING = 1.2 m (AVERAGE)

SHIELD BONDING : MULTIPLE-GROUNDED FOR CABLE SIZE UP TO 400 mm²
: SINGLE-POINT GROUNDED FOR CABLE SIZE 800 mm²

ARRANGEMENT IN CONDUIT : THREE CABLES IN COMMON DUCT FOR CABLE SIZE UP TO 400 mm²
: ONE CABLE IN ONE DUCT FOR CABLE SIZE 800 mm²

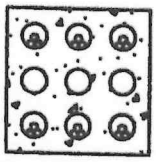

TYPICAL INSTALLATION

TABLE 4-310A CONDUCTOR SIZE UP TO 400 mm²

NOMINAL CROSS-SECTIONAL AREA OF CONDUCTOR, mm²	NUMBER OF CIRCUITS								
	1-2			3-6			7-10		
	If=0.7	If=0.85	If=1.0	If=0.7	If=0.85	If=1.0	If=0.7	If=0.85	If=1.0
70	211	196	183	183	167	153	153	137	123
120	288	267	248	248	225	205	206	183	164
240	417	384	354	355	320	291	292	258	231
400	529	486	447	448	403	364	365	322	287

NOMINAL CROSS-SECTIONAL AREA OF CONDUCTOR, mm²	NUMBER OF CIRCUITS								
	11-15			16-20			21-24		
	If=0.7	If=0.85	If=1.0	If=0.7	If=0.85	If=1.0	If=0.7	If=0.85	If=1.0
70	129	113	101	115	101	90	106	92	81
120	172	151	134	154	134	119	141	122	108
240	242	212	188	216	188	166	196	170	150
400	302	260	233	268	233	206	244	211	186

TABLE 4-310B CONDUCTOR SIZE 800 mm²

NOMINAL CROSS-SECTIONAL AREA OF CONDUCTOR, mm²	3 ELECTRICAL DUCTS			6 ELECTRICAL DUCTS			9 ELECTRICAL DUCTS		
	If=0.7	If=0.85	If=1.0	If=0.7	If=0.85	If=1.0	If=0.7	If=0.85	If=1.0
800	1099	1013	936	934	841	763	826	735	660

NOTE SEE APPLICATION OF LOAD FACTOR (If) ON UG-4-100 SH.NO.2

REV.NO.	DESCRIPTION OF REVISIONS	BY	DATE

DR. Monthol	CHK. Pongsan	METROPOLITAN ELECTRICITY AUTHORITY	SCALE NONE
DIR.DIV. R Thai		POWER CABLE AMPACITIES	SUPERSEDING
DIR.DEPT. A. Meawat		CABLE LAID IN DUCT BANK (CONCRETE ENCASED)	SH.NO. 1 OF 1
DEP.GOV.		(SHIELDED EXTRUDED INSULATION CU CONDUCTOR, RATED 12/20 kV)	DWG. NO. UG-4-310
DATE 16/10/2548			

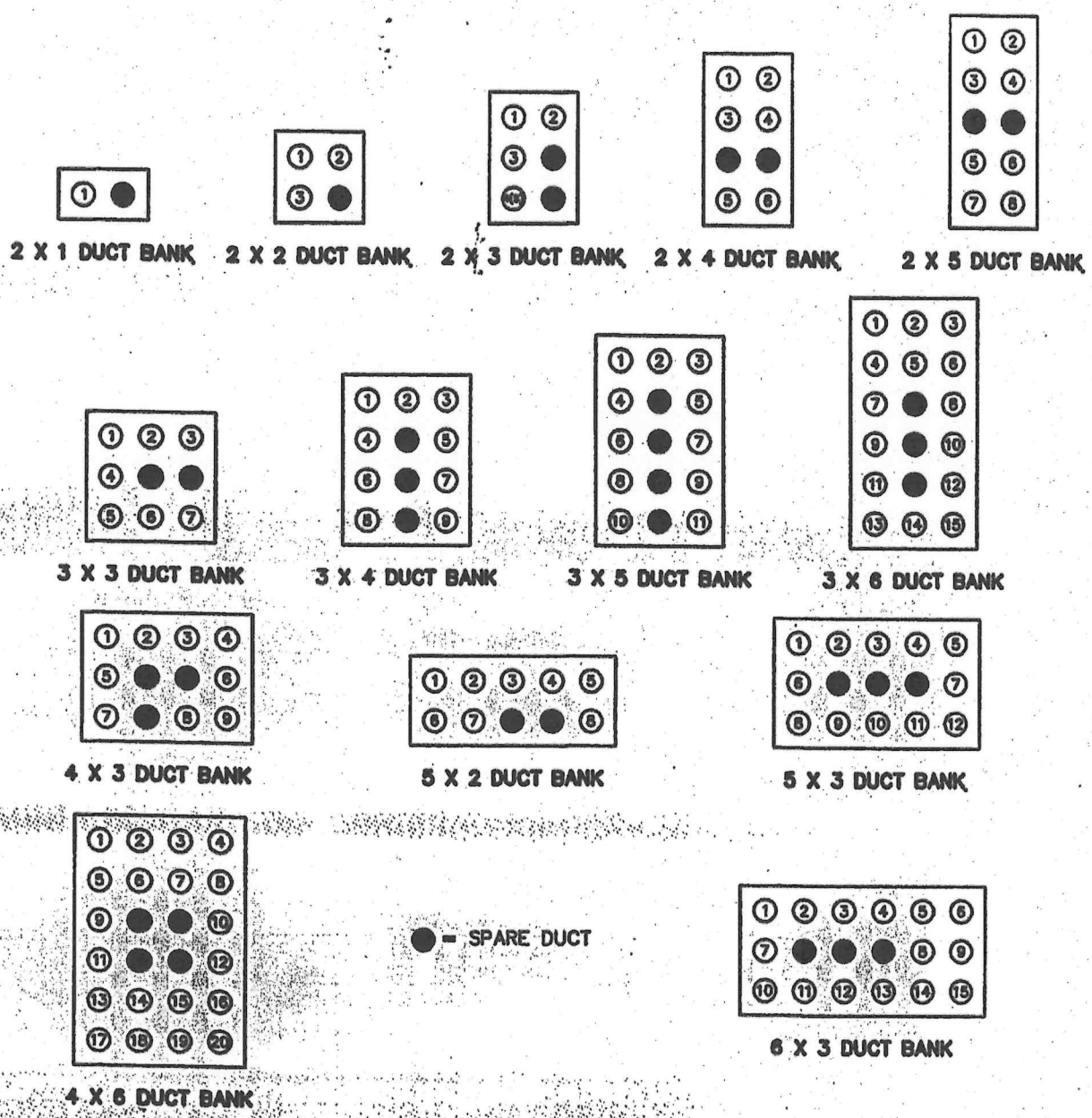

CIRCUIT SEQUENCE

NOTES

1. CIRCUIT SEQUENCE SHOWN IN THIS DRAWING ARE UG. CABLE OF MULTI-CORE AND/OR SINGLE-CORE CABLE WITH A MAXIMUM SIZE OF 400 mm^2. THE SAID CONSTRUCTIONS REQUIRE 3 OR 4 CABLES PER CIRCUIT PER DUCT FOR SINGLE-CORE CABLE.
2. CIRCUIT SEQUENCES OF 69/115 kV UG. CABLE IN DUCT BANK ARE SPECIFIED ON SH.NO.2. THE SAID CONSTRUCTIONS REQUIRE 1 CABLE PER DUCT.

FOR CONSTRUCTION REFERENCE ONLY

REV.NO.	DESCRIPTION OF REVISIONS	BY	DATE

DR. Monthol	CHK. Pongsan	METROPOLITAN ELECTRICITY AUTHORITY	SCALE NONE
DIR.DIV. R. Thank		CIRCUIT SEQUENCE OF UG. CABLE IN DUCT BANK	SUPERSEDING UG-4-002 DATE 5/6/2534
DIR.DEPT. A. Nsawat			SH.NO. 1 OF 2
DEP.GOV.			DWG. NO. UG-4-002
DATE 9/12/2546			

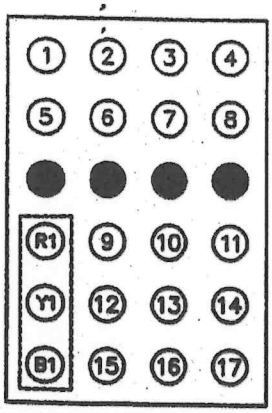

1–CKT SINGLE CONDUCTOR OF TRANSMISSION LINE

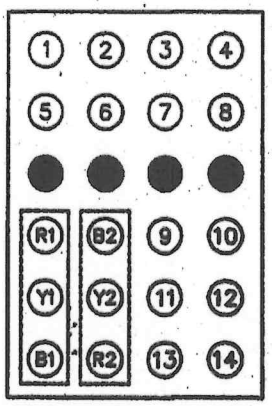

2–CKT SINGLE CONDUCTOR OF TRANSMISSION LINE

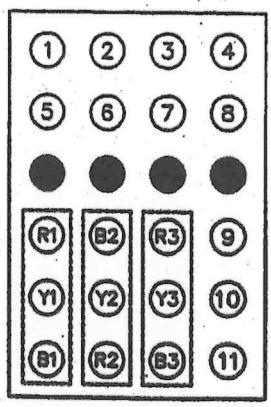

3–CKT SINGLE CONDUCTOR OF TRANSMISSION LINE

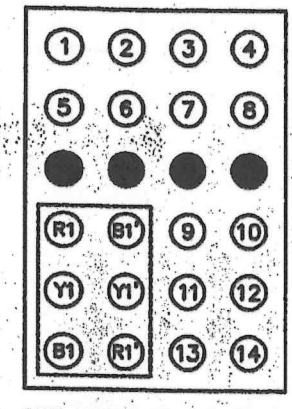

1–CKT BUNDLED CONDUCTOR OF TRANSMISSION LINE

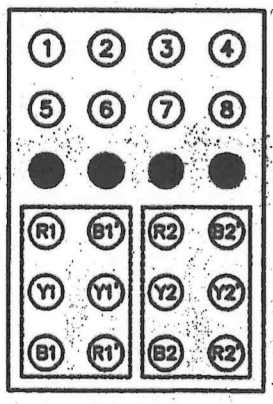

2–CKT BUNDLED CONDUCTOR OF TRANSMISSION LINE

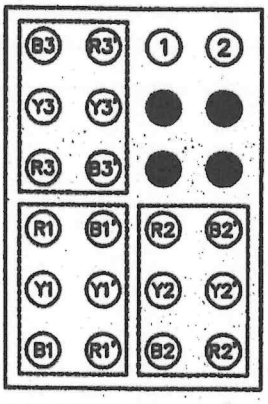

3–CKT BUNDLED CONDUCTOR OF TRANSMISSION LINE

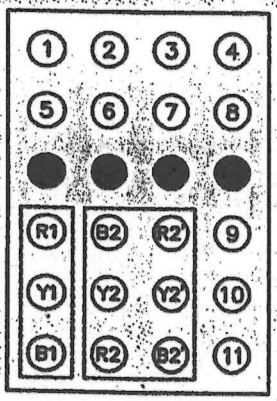

1–CKT SINGLE AND 1–CKT BUNDLED CONDUCTOR OF TRANSMISSION LINE

● = SPARE DUCT

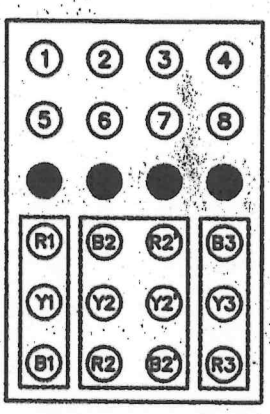

2–CKT SINGLE AND 1–CKT BUNDLED CONDUCTOR OF TRANSMISSION LINE

FOR CONSTRUCTION REFERENCE ONLY

NOTES

1. SYMBOL R1, Y1, B1, R2, Y2, B2, ... AND R1', Y1', B1', R2', Y2', B2', ... INDICATE PHASE AND CIRCUIT SEQUENCE OF 69/115 kV UG. CABLE.
2. NUMBER 1, 2, 3, ... INDICATE CIRCUIT SEQUENCE OF 12/20 kV UG. CABLE.
3. NUMBER OF CABLE PER DUCT ARE 1 (ONE) FOR 69/115 kV UG. CABLE AND 3 (THREE) FOR 12/20 kV UG. CABLE. (MAX. 400 mm²)

REV.NO.	DESCRIPTION OF REVISIONS	BY	DATE

DR. Monthol CHK. Pongsan	METROPOLITAN ELECTRICITY AUTHORITY	SCALE NONE
DIR.DIV. R. Thaw	CIRCUIT ARRANGEMENT OF UG. CABLE IN DUCT BANK	SUPERSEDING
DIR.DEPT. A. Nuanwan		SH.NO. 2 OF 2
DEP.GOV.		DWG. NO. UG-4-002
DATE 9/12/2546		

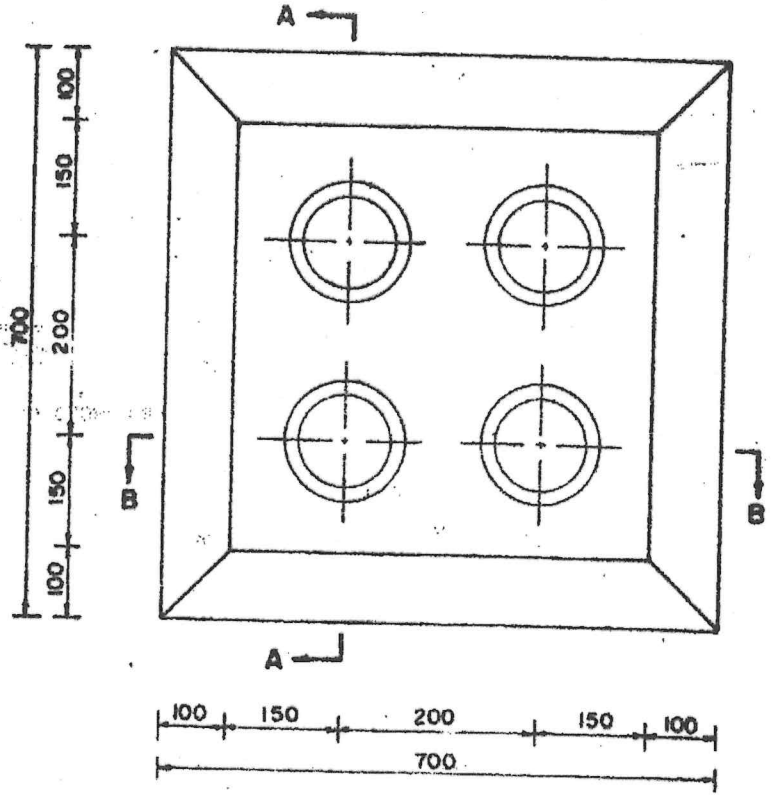

TYPICAL DUCT WINDOW END BELL

(Ø 140 MM. HDPE CONDUIT)

NOTES.

1. DIMENSIONS ARE IN MM.
2. OTHER CONFIGURATIONS OF DUCT BANKS ARE THE SAME.
3. SEE SECTION VIEW ON SH. NO. 2
4. APPLICATION: FOR UG. PRIMARY AND SUBTRANSMISSION CONSTRUCTION.

REV. NO.	DESCRIPTION OF REVISIONS	BY	DATE

DR.	CHK.	METROPOLITAN ELECTRICITY AUTHORITY	SCALE 1:10
DIV. CHIEF		DUCT BANK AND CONDUIT CONSTRUCTION HDPE DUCT WINDOW END BELL	SUPERSEDING
EXC. MGR.			SH. NO. 1 OF 4
DTY. GEN. MGR.			DWG NO. UG-3-110
DATE	2530		

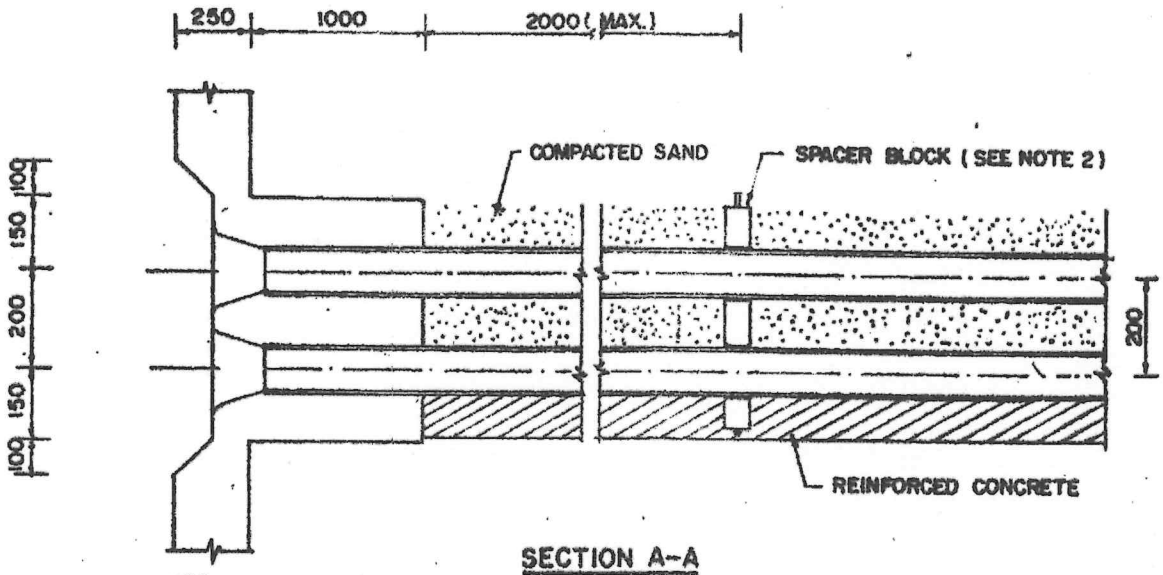

SECTION A-A

TYPICAL Ø 140 MM. 2x2 HDPE DUCT BANK

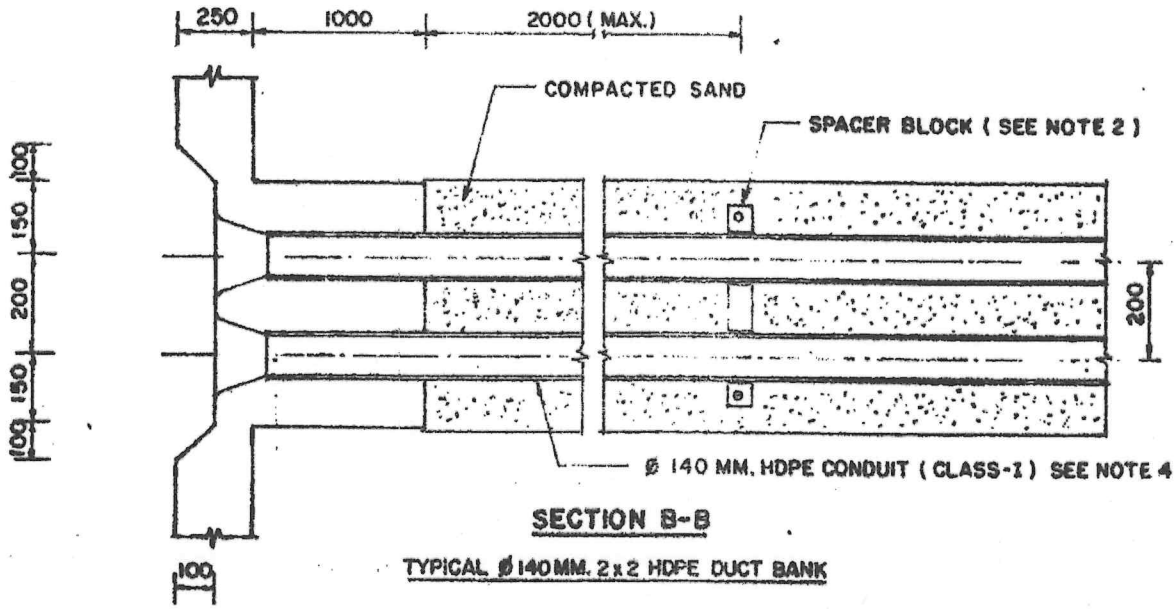

SECTION B-B

TYPICAL Ø 140 MM. 2x2 HDPE DUCT BANK

NOTES.

1. DIMENSIONS ARE IN MM.
2. FOR DETAILS OF SPACER BLOCK CONSTRUCTION, SEE DWG NO. UG-3-100
3. SEE TYPICAL METHOD OF FORMING DUCT ENTRY ON SH. NO. 3
4. FOR DETAILS OF HDPE CONDUIT, SEE DWG. NO. UG-8-008.

REV. NO.	DESCRIPTION OF REVISIONS	BY	DATE

DR.	CHK.	METROPOLITAN ELECTRICITY AUTHORITY	SCALE NONE
DIV. CHIEF		DUCT BANK AND CONDUIT CONSTRUCTION TYPICAL DUCT WINDOW END BELL VERTICAL & HORIZONTAL SPACING	SUPERSEDING
EXC. MGR.			SH. NO. 2 OF 4
DTY. GEN. MGR.			DWG NO. UG-3-110
DATE	2530		

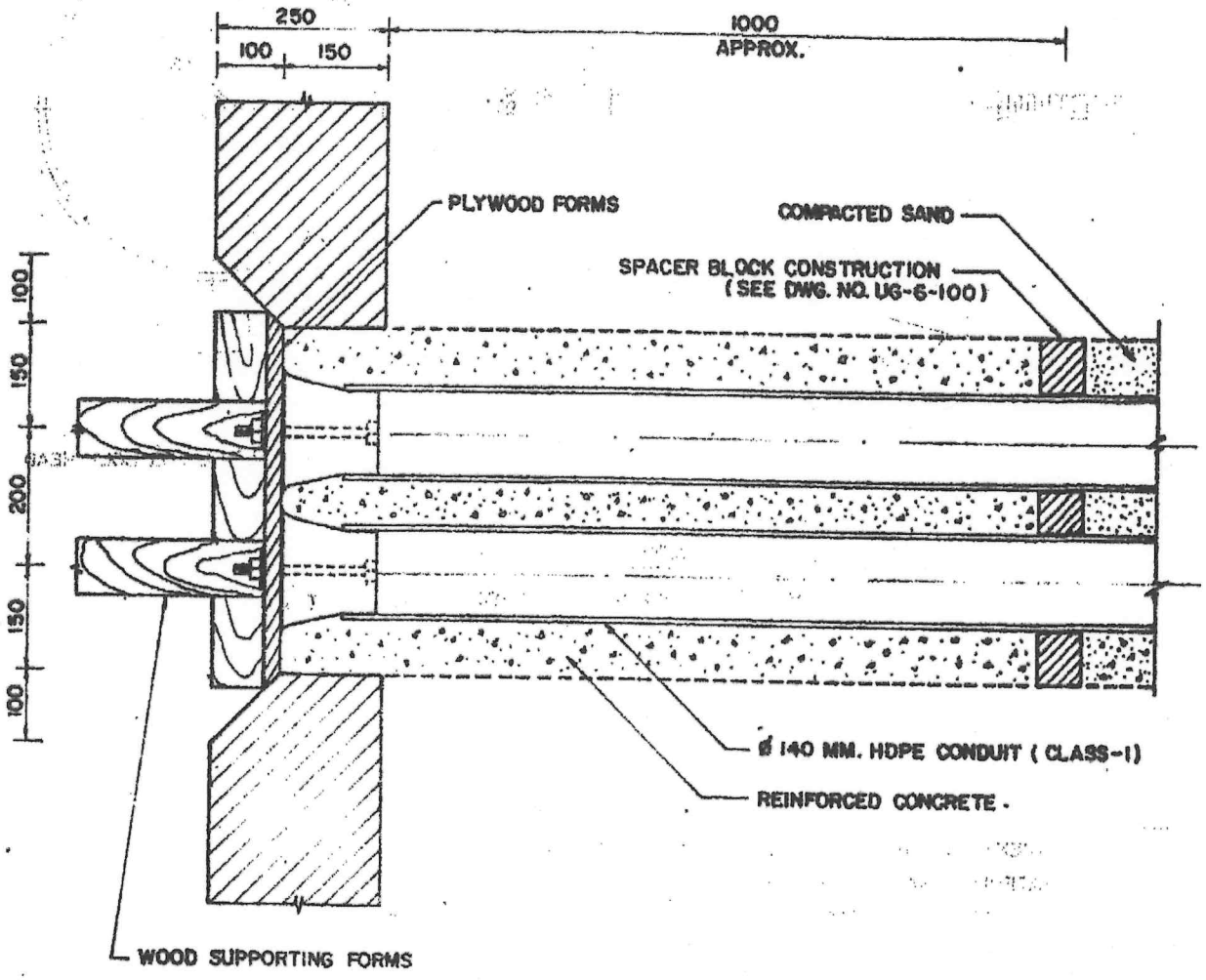

DETAIL "A"

METHOD FOR FORMING TYPICAL DUCT ENTRY

(ø 140 MM. 2x2 DUCT BANK)

NOTES:

1. DIMENSIONS ARE IN MM.
2. USING END BELL FORM AS SHOWN ON SH. NO. 4 TO FORM END BELL AND AFTER REMOVING END BELL FORM, THE CONCRETE SURFACE SHALL BE SMOOTHLY FINISHED.
3. FOR DETAILS OF HDPE CONDUIT, SEE DWG. NO. UG-8-008

REV. NO.	DESCRIPTION OF REVISIONS	BY	DATE

DR.	CHK.	METROPOLITAN ELECTRICITY AUTHORITY	SCALE NONE
DIV. CHIEF		DUCT BANK AND CONDUIT CONSTRUCTION TYPICAL METHOD FOR FORMING DUCT ENTRY	SUPERSEDING
EXC. MGR.			SH. NO. 3 OF 4
DTY. GEN. MGR.			DWG NO. UG-3-110
DATE	.2530		

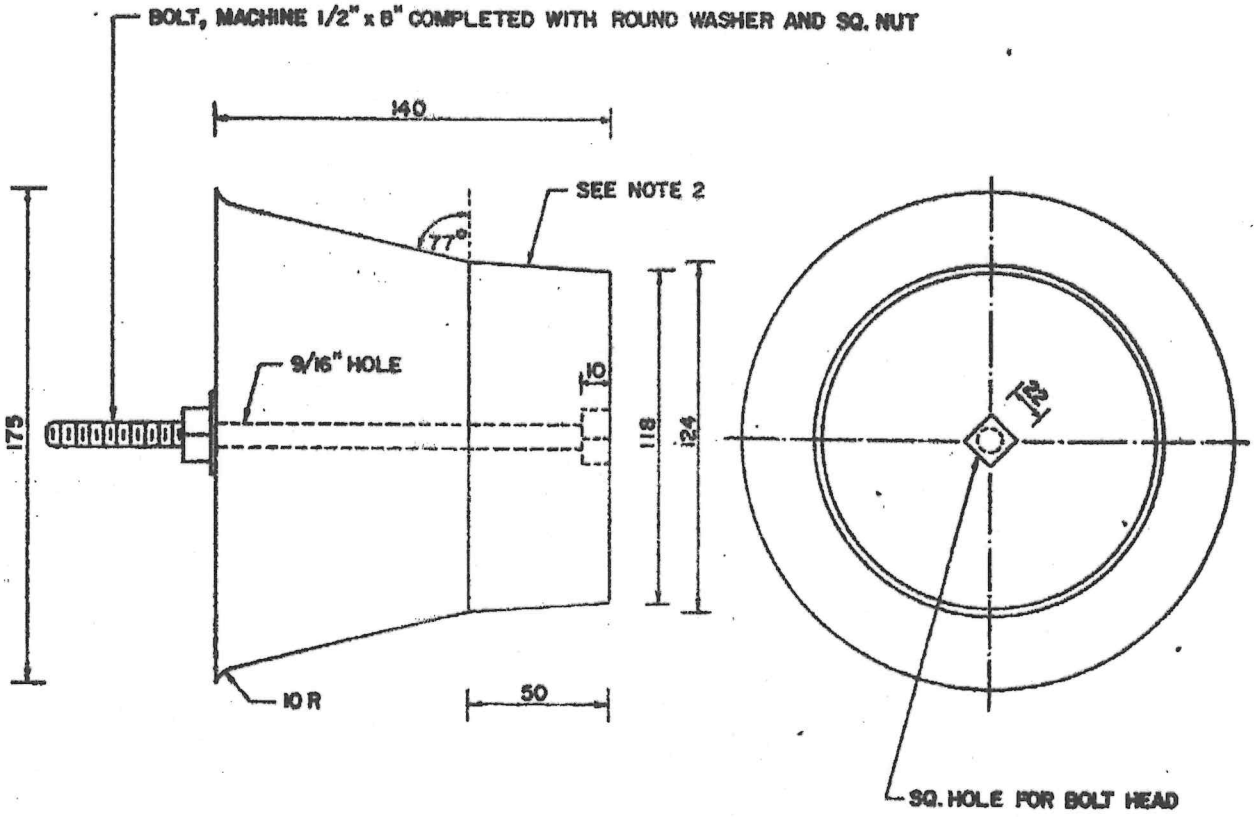

END BELL FORM

(FOR Ø 140 MM. HDPE CONDUIT CLASS-I)

NOTES.

1. DIMENSIONS ARE IN MM. UNLESS OTHERWISE SPECIFIED.
2. MATERIAL SHALL BE HARDEN WOOD.
3. SEE DETAILS OF HDPE CONDUIT CLASS-I ON DWG. NO. UG-8-008

REV. NO.	DESCRIPTION OF REVISIONS	BY	DATE

DR.	CHK.	METROPOLITAN ELECTRICITY AUTHORITY	SCALE 1:2.5
DIV. CHIEF		DUCT BANK AND CONDUIT CONSTRUCTION END BELL FORM FOR HDPE DUCT WINDOW	SUPERSEDING
EXC. MGR.			SH. NO. 4 OF 4
DTY. GEN. MGR.			DWG NO. UG-3-110
DATE	2530		

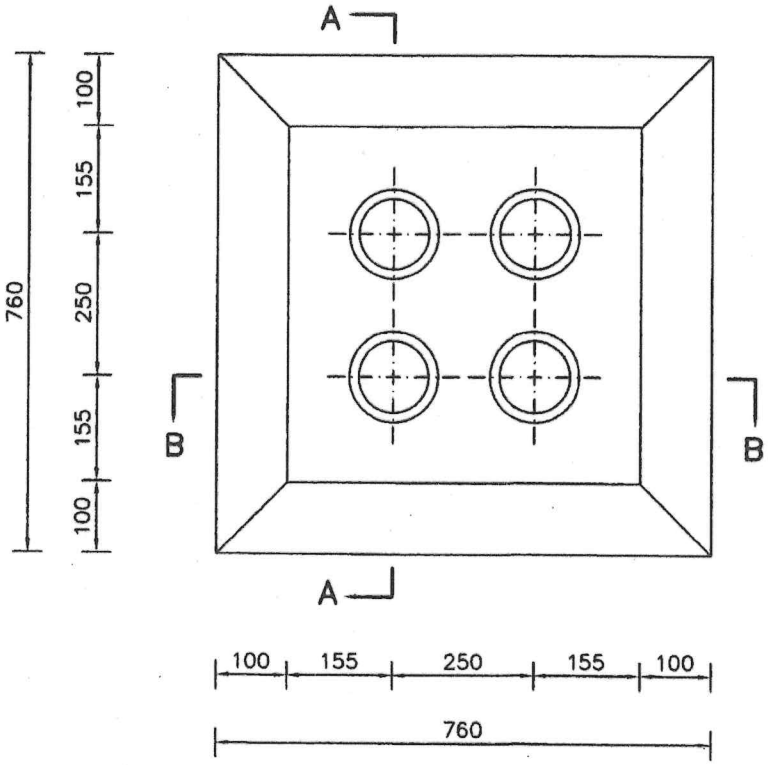

TYPICAL DUCT WINDOW END BELL FOR ø125 mm RTRC[4)]

NOTES
1. DIMENSIONS ARE IN mm.
2. OTHER CONFIGURATIONS OF DUCT BANKS ARE THE SAME.
3. SEE SECTION VIEW ON SH.NO. 2
4. REFERENCE CONDUIT FOR RTRC : ท่ออีพ็อกซีเรซินเสริมใยแก้วสำหรับใช้ร้อยสายไฟฟ้า และสายโทรศัพท์ ชนิด BG ชั้นคุณภาพที่ 1 ตาม มอก. 2518-2556 หรือฉบับล่าสุด

APPLICATION : FOR UNDERGROUND PRIMARY AND SUBTRANSMISSION CONSTRUCTION.

REV.NO.	DESCRIPTION OF REVISIONS	BY	DATE

DR. Jintasit	ENGR. Jintasit	METROPOLITAN ELECTRICITY AUTHORITY	SCALE NONE
CHF.SEC. Monthol (acting)		DUCT BANK AND CONDUIT CONSTRUCTION REINFORCED THERMOSETTING RESIN CONDUIT (RTRC) (CONCRETE ENCASED INSTALLATION)	SUPERSEDING 10A4-0401
CHK. –			SH.NO. 1 OF 3
DIR.DIV. Pongsan			DWG. NO. 10A4-0730
DATE 22/5/2556			

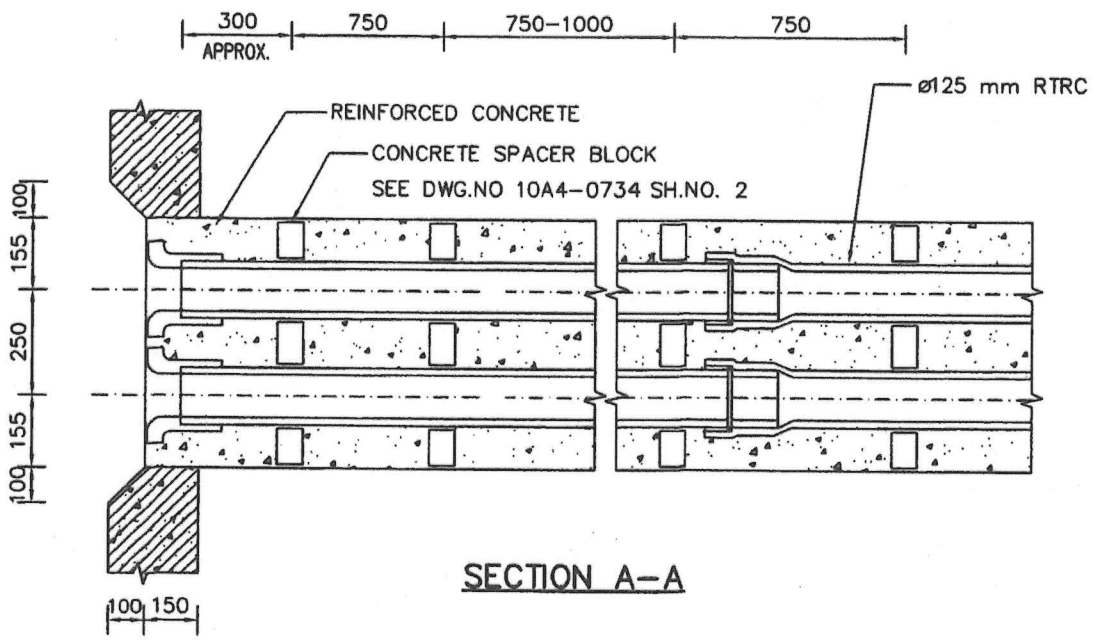

SECTION A–A

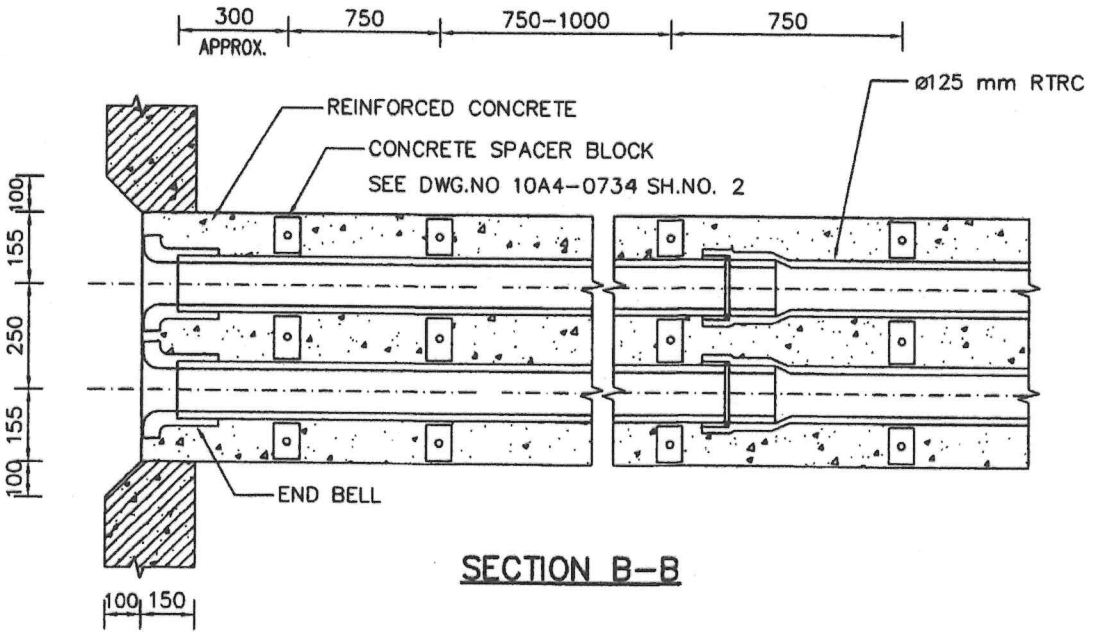

SECTION B–B

TYPICAL DUCT AND WINDOW END BELL 2 x 2 DUCT BANK

(VERTICAL AND HORIZONTAL SPACING TO BE CONCRETE ENCASED INSTALLATION)

NOTES
1. DIMENSIONS ARE IN mm.
2. SEE METHOD FOR FORMING TYPICAL DUCT ENTRY ON SH.NO. 3

APPLICATION : FOR UNDERGROUND PRIMARY AND SUBTRANSMISSION CONSTRUCTION

REV.NO.	DESCRIPTION OF REVISIONS	BY	DATE

DR. Jintasit	ENGR. Jintasit	METROPOLITAN ELECTRICITY AUTHORITY	SCALE NONE
CHF.SEC. Monthol (acting)		DUCT BANK AND CONDUIT CONSTRUCTION REINFORCED THERMOSETTING RESIN CONDUIT (RTRC) (CONCRETE ENCASED INSTALLATION)	SUPERSEDING 10A4–0401
CHK. –			SH.NO. 2 OF 3
DIR.DIV. Pongsan			DWG. NO. 10A4–0730
DATE 22/5/2556			

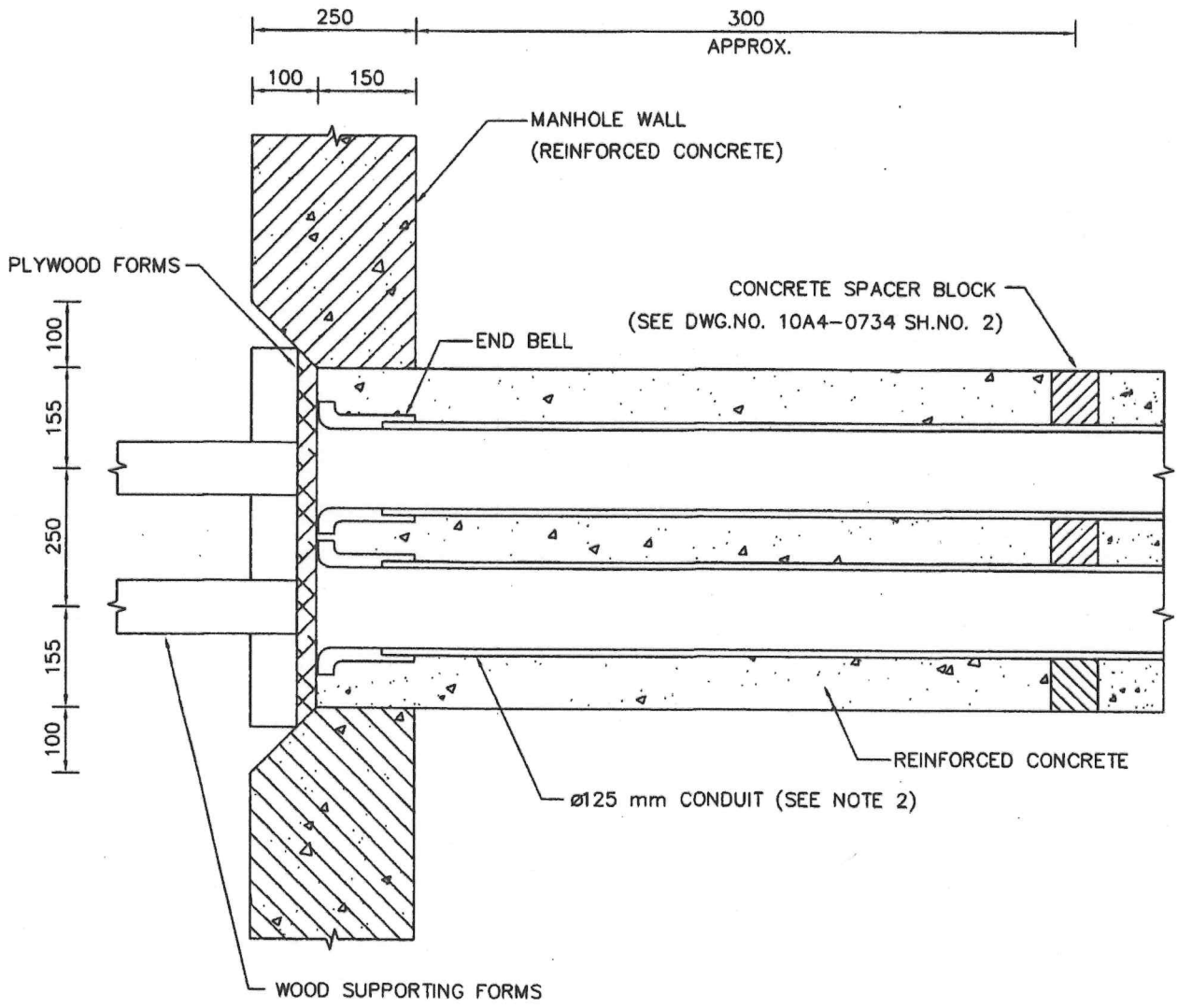

METHOD FOR FORMING TYPICAL DUCT ENTRY 2 x 2 DUCT BANK

(FOR ø125 mm CONDUIT CLASS 1 (SEE NOTE 2))

NOTES
1. DIMENSIONS ARE IN mm.
2. CONFIGURATION IS BASED ON ø125 mm CONDUIT (SEE NOTE 3)
3. REFERENCE CONDUIT : ท่ออีพ็อกซีเรซินเสริมใยแก้วสำหรับใช้ร้อยสายไฟฟ้า และสายโทรศัพท์ชนิด BG ชั้นคุณภาพที่ 1 ตาม มอก. 2518-2556 หรือฉบับล่าสุด

APPLICATION : FOR UNDERGROUND PRIMARY AND SUBTRANSMISSION CONSTRUCTION

REV.NO.	DESCRIPTION OF REVISIONS	BY	DATE

DR. Jintasit	ENGR. Jintasit	METROPOLITAN ELECTRICITY AUTHORITY	SCALE NONE
CHF.SEC. Monthol (acting)		DUCT BANK AND CONDUIT CONSTRUCTION REINFORCED THERMOSETTING RESIN CONDUIT (RTRC) (CONCRETE ENCASED INSTALLATION)	SUPERSEDING 10A4-0401
CHK. –			SH.NO. 3 OF 3
DIR.DIV. Pongsan			DWG. NO. 10A4-0730
DATE 22/5/2556			

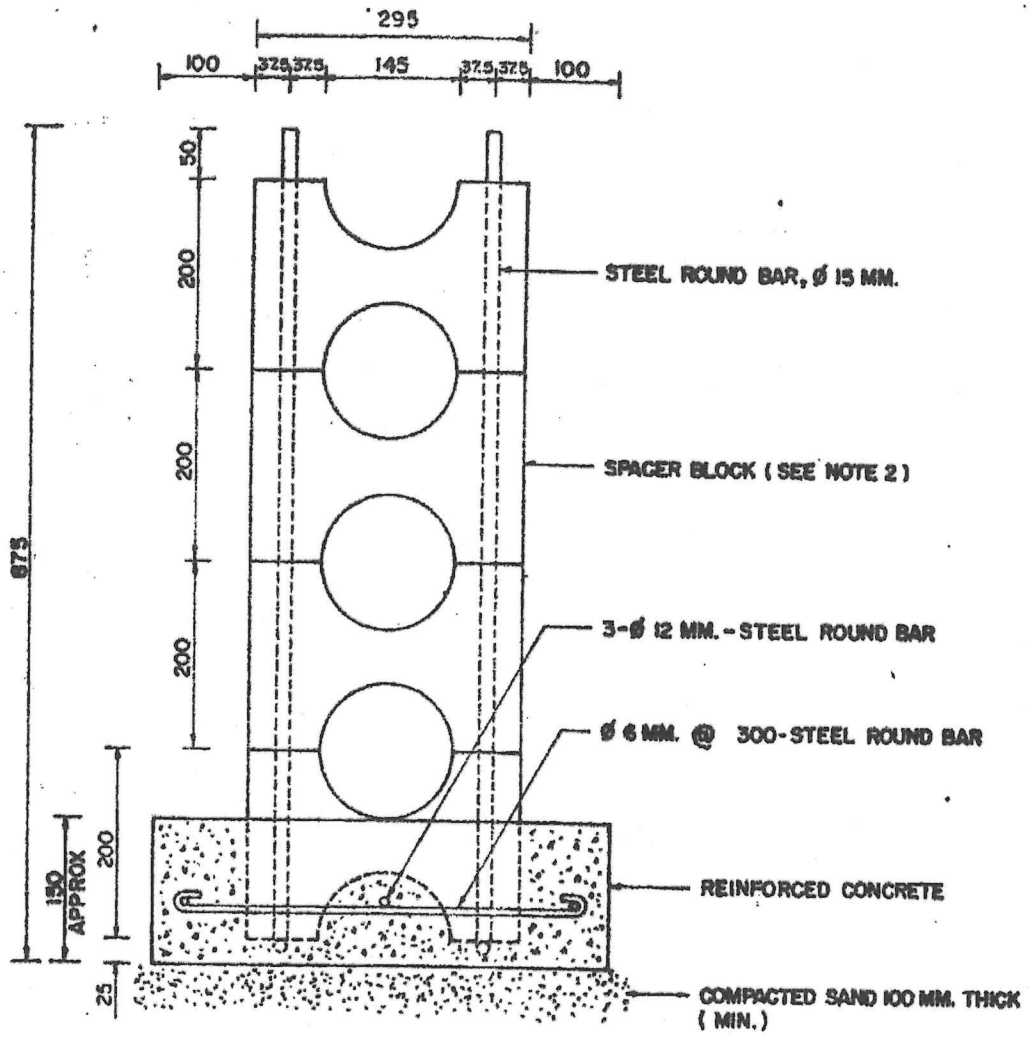

1 x 3 DUCT BANK
(Ø 140 MM. HDPE CONDUIT)

NOTES.

1. DIMENSIONS ARE IN MM. UNLESS OTHERWISE SPECIFIED.
2. SEE SPACER BLOCK DETAIL ON DWG. NO. UG-8-002 SH. NO. 2
3. APPLICATION: FOR UG. PRIMARY AND SUBTRANSMISSION CONSTRUCTION.

REV. NO.	DESCRIPTION OF REVISIONS	BY	DATE

DR.	CHK.	METROPOLITAN ELECTRICITY AUTHORITY	SCALE 1:75
DIV. CHIEF		HDPE DUCT BANK	SUPERSEDING
EXC. MGR.			SH. NO. 1 OF 4
DTY. GEN. MGR.			DWG. NO. UG-3-100
DATE	2530		

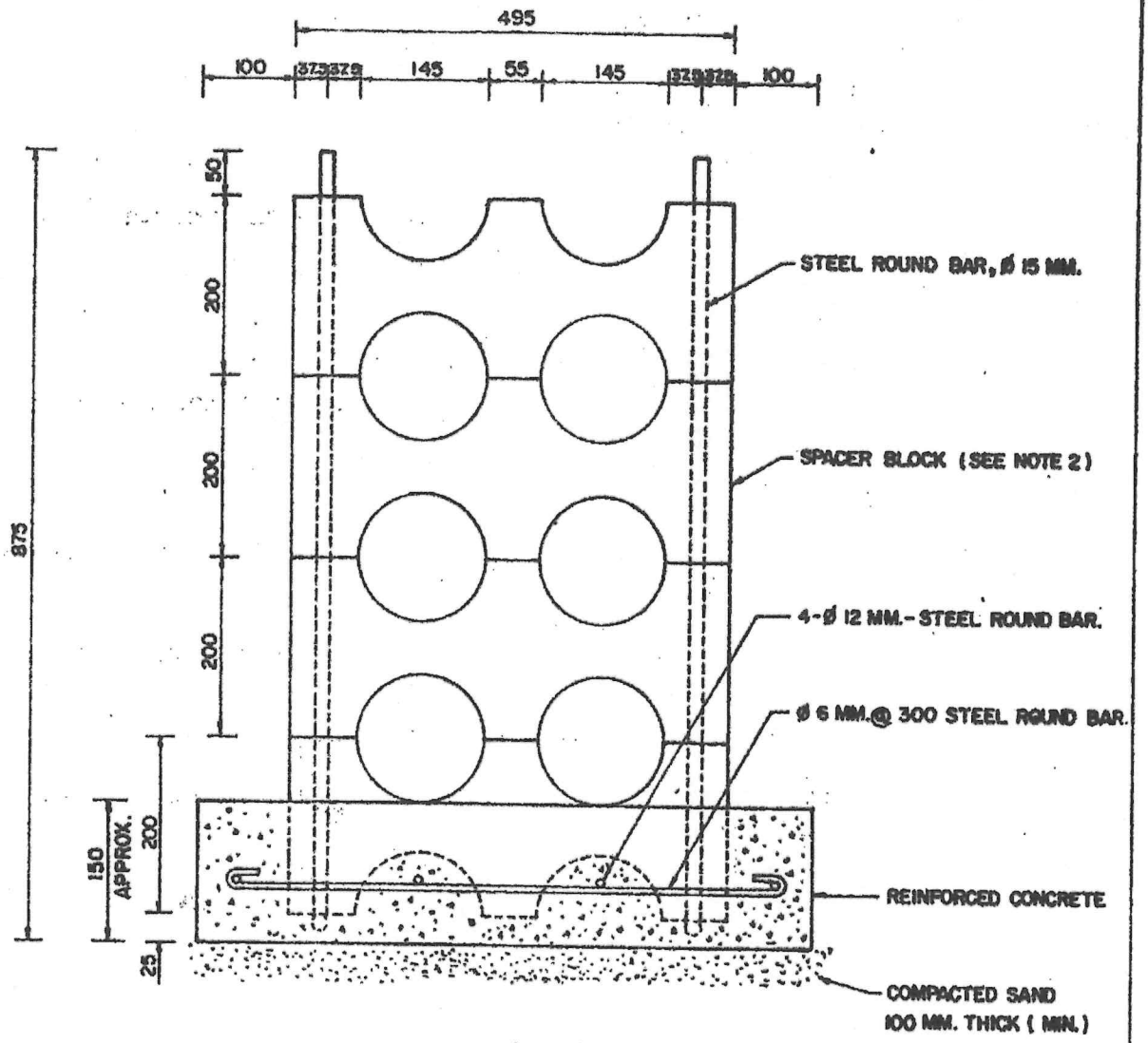

2 x 3 DUCT BANK

(Ø 140 MM. HDPE CONDUIT)

NOTES.

1. DIMENSIONS ARE IN MM. UNLESS OTHERWISE SPECIFIED.
2. SEE SPACER BLOCK DETAIL ON DWG. NO. UG-8-002 SH. NO. 3
3. APPLICATION: FOR UG. PRIMARY AND SUBTRANSMISSION CONSTRUCTION.

REV. NO.	DESCRIPTION OF REVISIONS	BY	DATE

DR.	CHK.	METROPOLITAN ELECTRICITY AUTHORITY	SCALE 1 : 7.5
DIV. CHIEF		HDPE DUCT BANK	SUPERSEDING
EXC. MGR.			SH. NO. 2 OF 4
DTY. GEN. MGR.			DWG. NO. UG-3-100
DATE	2530		

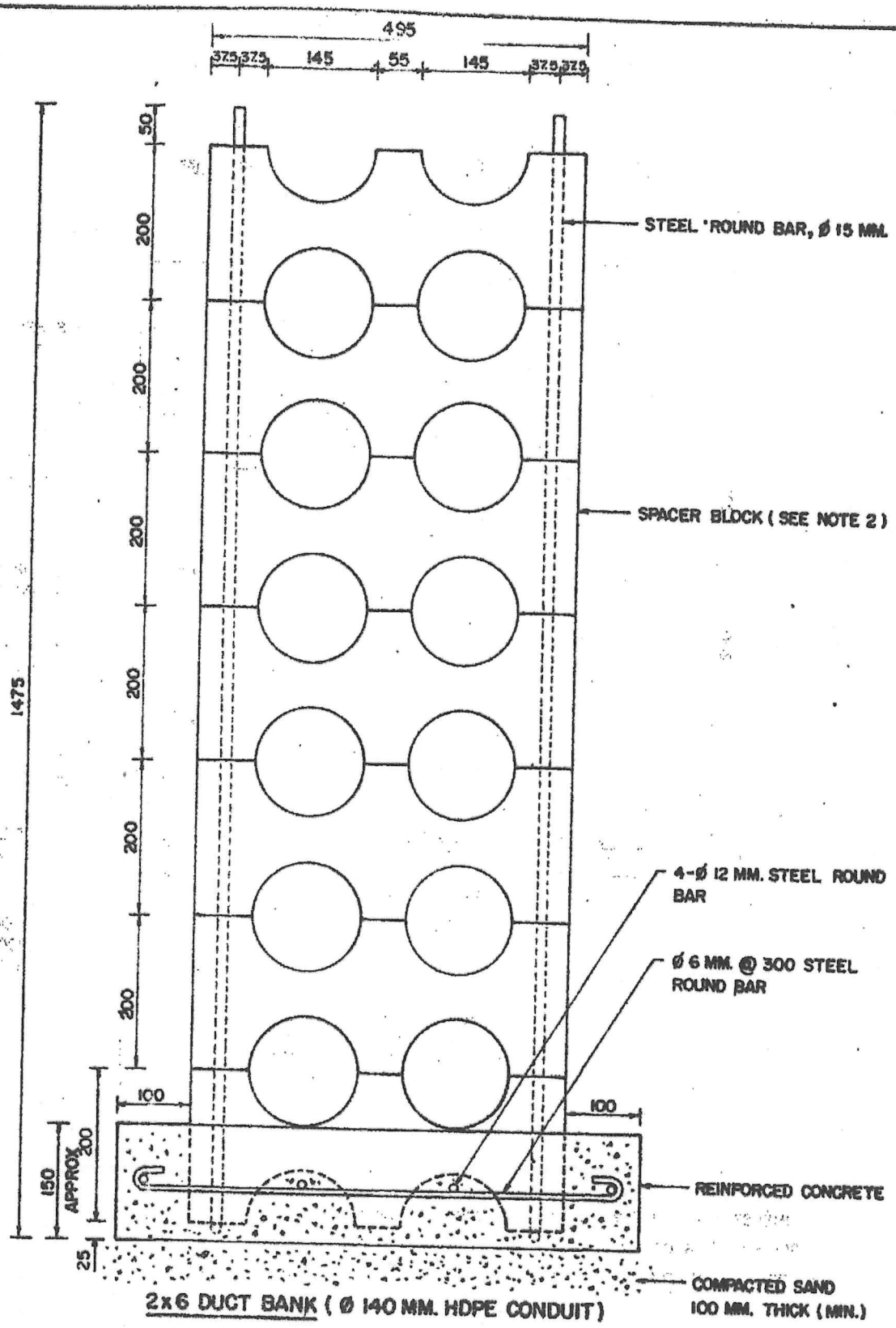

2x6 DUCT BANK (Ø 140 MM. HDPE CONDUIT)

NOTES.

1. DIMENSIONS ARE IN MM. UNLESS OTHERWISE SPECIFIED.
2. SEE SPACER BLOCK DETAIL ON DWG. NO. UG-8-002 SH. NO. 3.
3. APPLICATION: FOR UG. PRIMARY AND SUBTRANSMISSION CONSTRUCTION.

REV. NO.	DESCRIPTION OF REVISIONS	BY	DATE

DR.	CHK.	METROPOLITAN ELECTRICITY AUTHORITY	SCALE 1:7.5
DIV. CHIEF		HDPE DUCT BANK	SUPERSEDING
EXC. MGR.			SH. NO. 3 OF 4
DTY. GEN. MGR.			DWG NO. UG-3-100
DATE 2530			

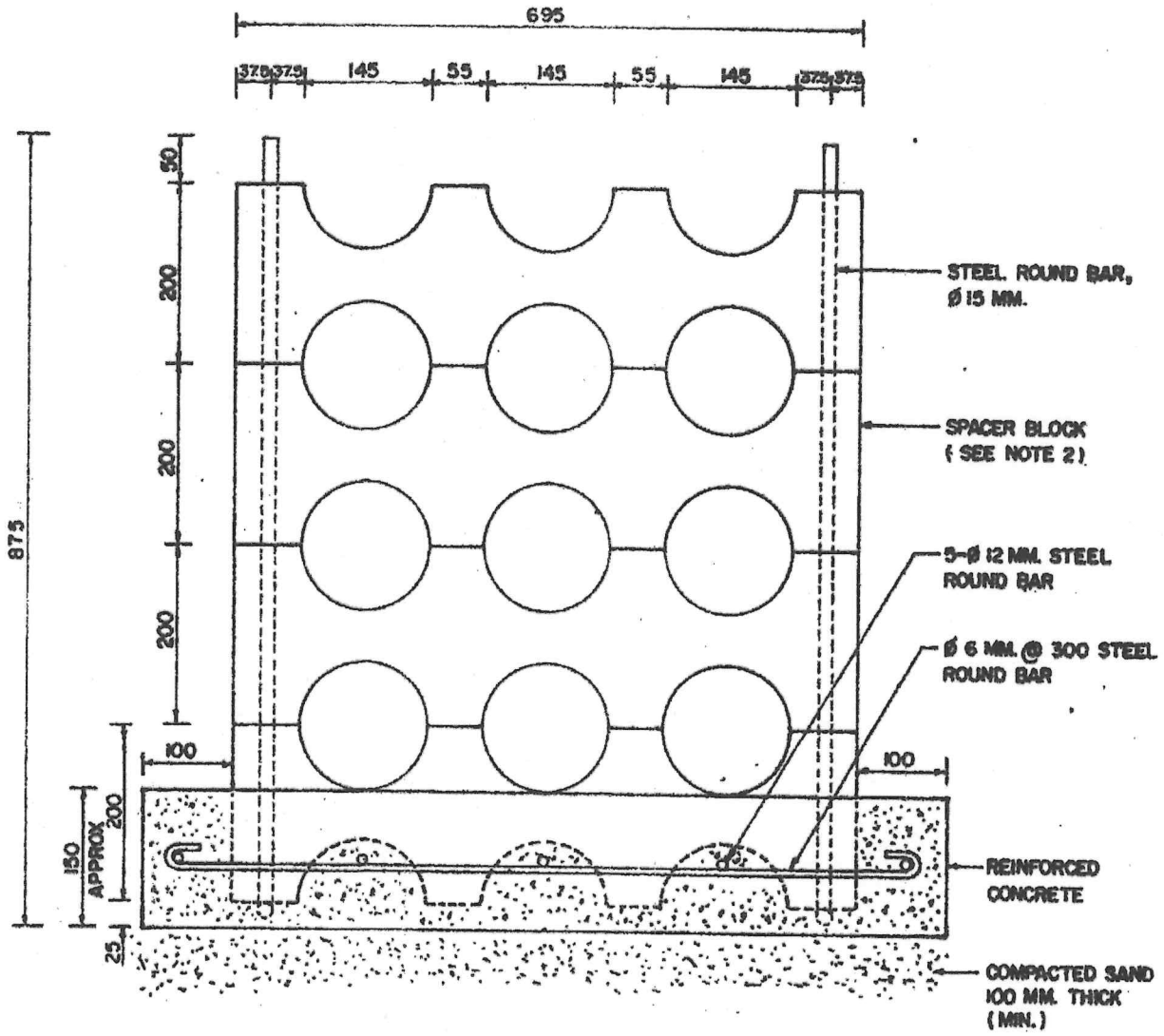

3 x 3 DUCT BANK

(Ø 140 MM. HDPE CONDUIT)

NOTES.

1. DIMENSIONS ARE IN MM. UNLESS OTHERWISE SPECIFIED.
2. SEE SPACER BLOCK DETAIL ON DWG.NO. UG-8-002 SH. NO. 3
3. APPLICATION: FOR UG. PRIMARY AND SUBTRANSMISSION CONSTRUCTION.

REV. NO.	DESCRIPTION OF REVISIONS	BY	DATE

DR.	CHK.	METROPOLITAN ELECTRICITY AUTHORITY	SCALE 1:25
DIV. CHIEF			SUPERSEDING
EXC. MGR.		HDPE DUCT BANK	SH. NO. 4 OF 4
DTY. GEN. MGR.			DWG NO. UG-3-100
DATE	2530		

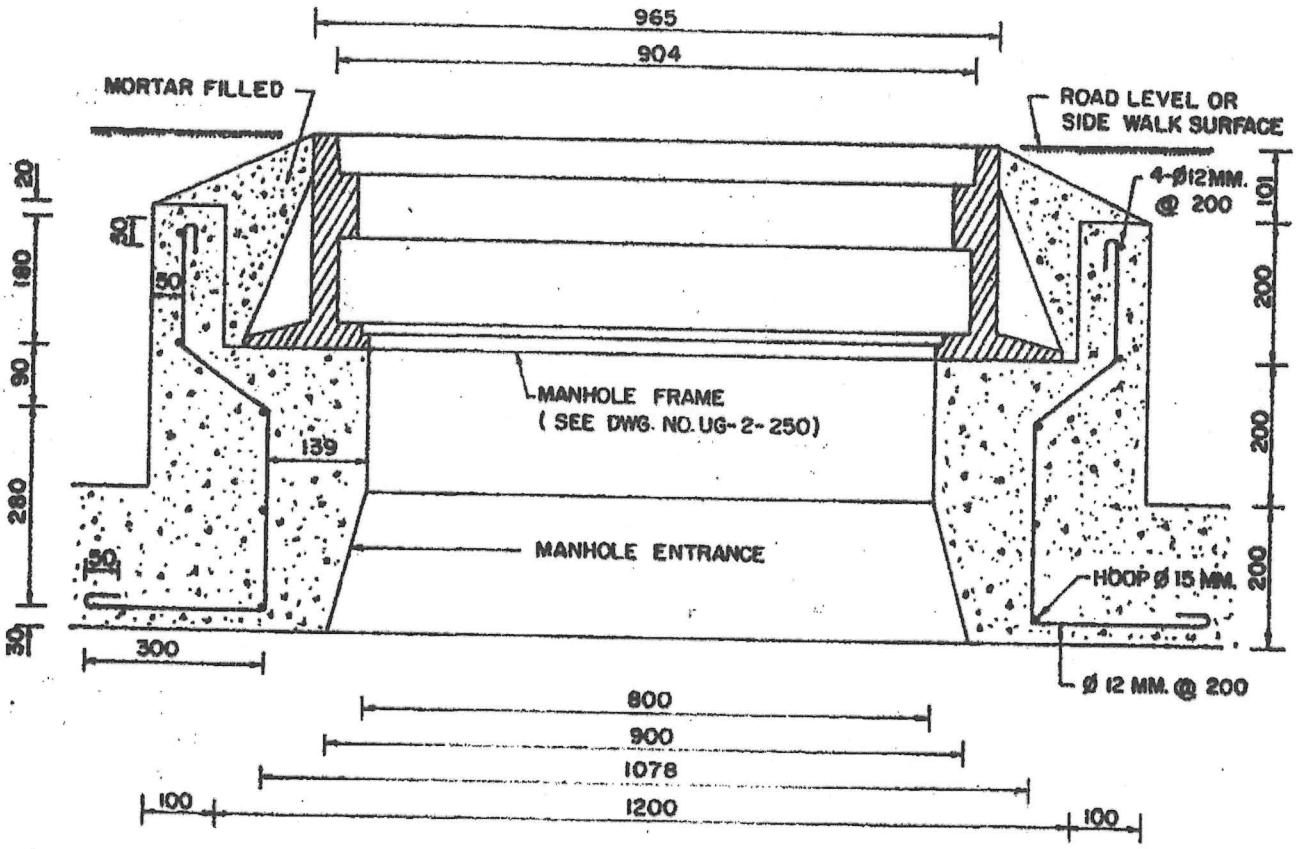

SECTION

WATER SEAL MANHOLE ENTRANCE REINFORCEMENT

(WITH MANHOLE FRAME)

NOTE. DIMENSIONS ARE IN MM.

REV. NO.	DESCRIPTION OF REVISIONS	BY	DATE

DR.	CHK. Sombut.	METROPOLITAN ELECTRICITY AUTHORITY	SCALE 1:10
DIV. CHIEF Suchart B.		WATER SEAL MANHOLE ENTRANCE REINFORCEMENT	SUPERSEDING 2418
EXC. MGR. T.H.			SH. NO. 1 OF 1
DTY. GEN. MGR.			DWG NO. UG-2-270
DATE 31/3/2530			

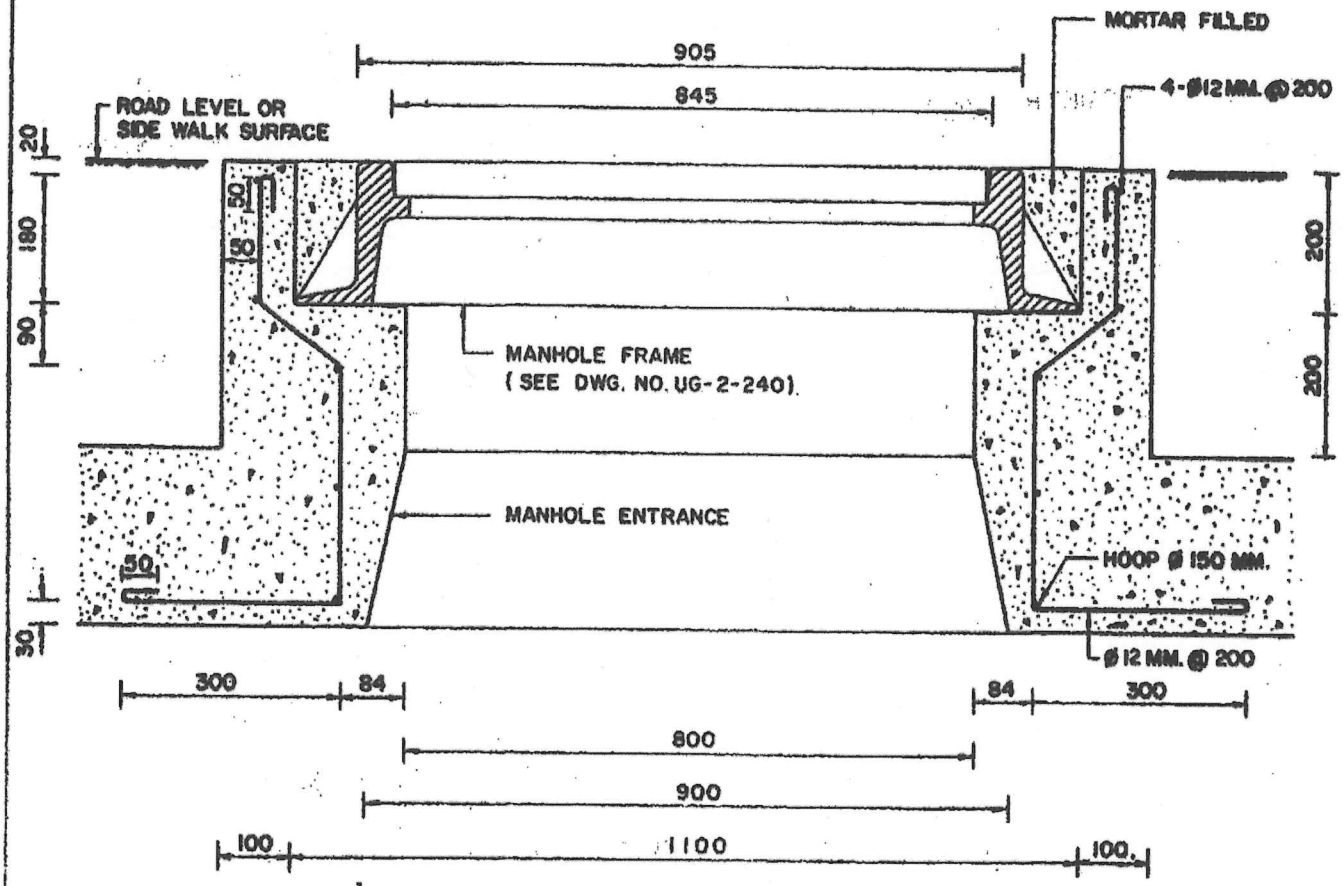

SECTION

MANHOLE ENTRANCE REINFORCEMENT (TYPE 1)

(WITH MANHOLE FRAME)

NOTE. DIMENSIONS ARE IN MM.

REV. NO.	DESCRIPTION OF REVISIONS	BY	DATE

DR. Apichart	CHK. Sombat	METROPOLITAN ELECTRICITY AUTHORITY	SCALE 1:10
DIV. CHIEF Sudchart B.		MANHOLE ENTRANCE REINFORCEMENT	SUPERSEDING 2418
EXC. MGR. T.H.			SH. NO. 1 OF 2
DTY. GEN. MGR.			DWG. NO. UG-2-260
DATE 31/3/2530			

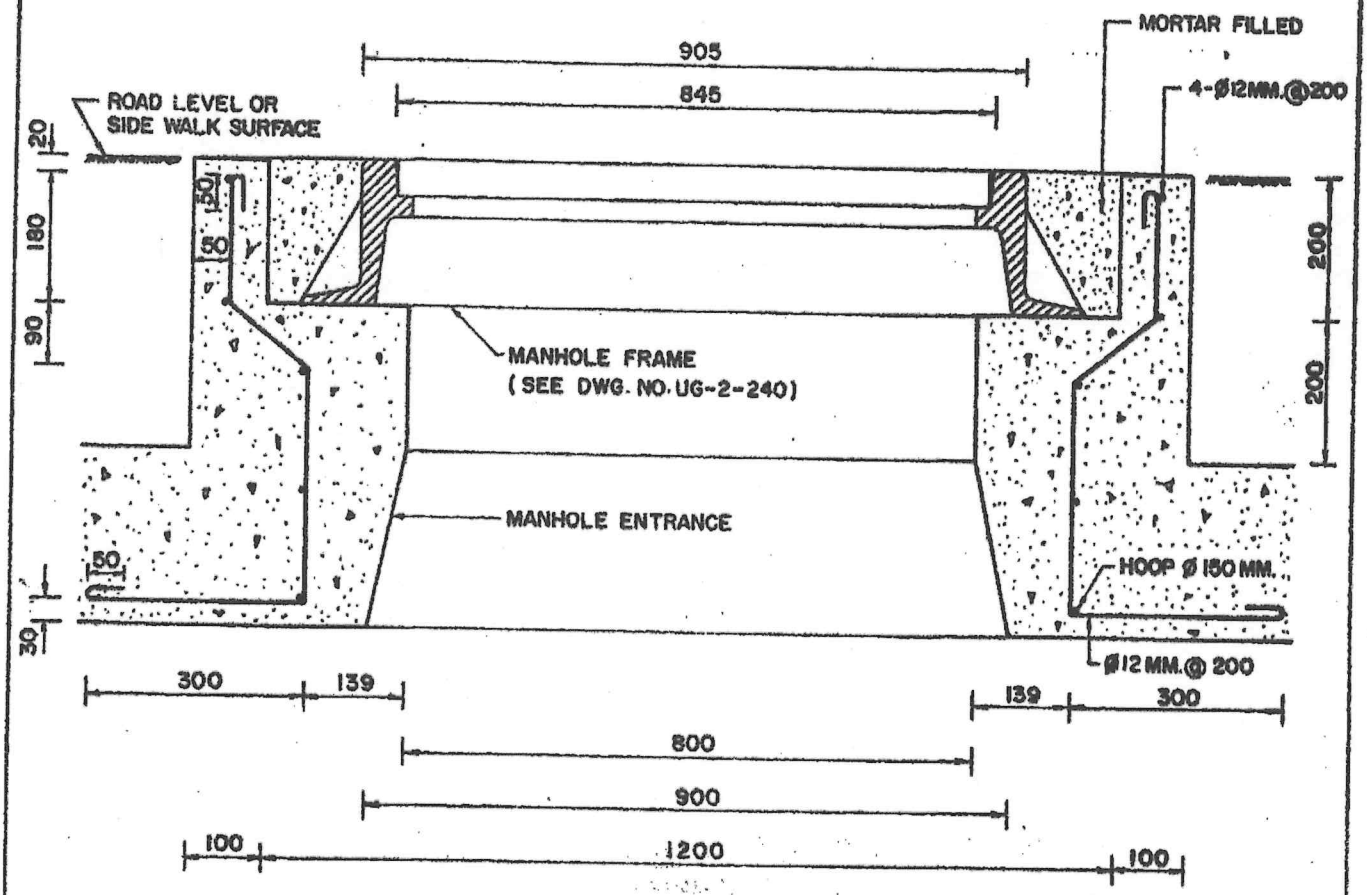

SECTION

MANHOLE ENTRANCE REINFORCEMENT (TYPE 2)

(WITH MANHOLE FRAME)

NOTE. DIMENSIONS ARE IN MM.

REV. NO.	DESCRIPTION OF REVISIONS	BY	DATE

DR. Apichart.	CHK. Sombat.	METROPOLITAN ELECTRICITY AUTHORITY	SCALE 1:10
DIV. CHIEF Suchart B.		MANHOLE ENTRANCE REINFORCEMENT	SUPERSEDING 2418
EXC. MGR. T.H.			SH. NO. 2 OF 2
DTY. GEN. MGR. Bonguid			DWG. NO. UG-2-260
DATE 31/3/2530			

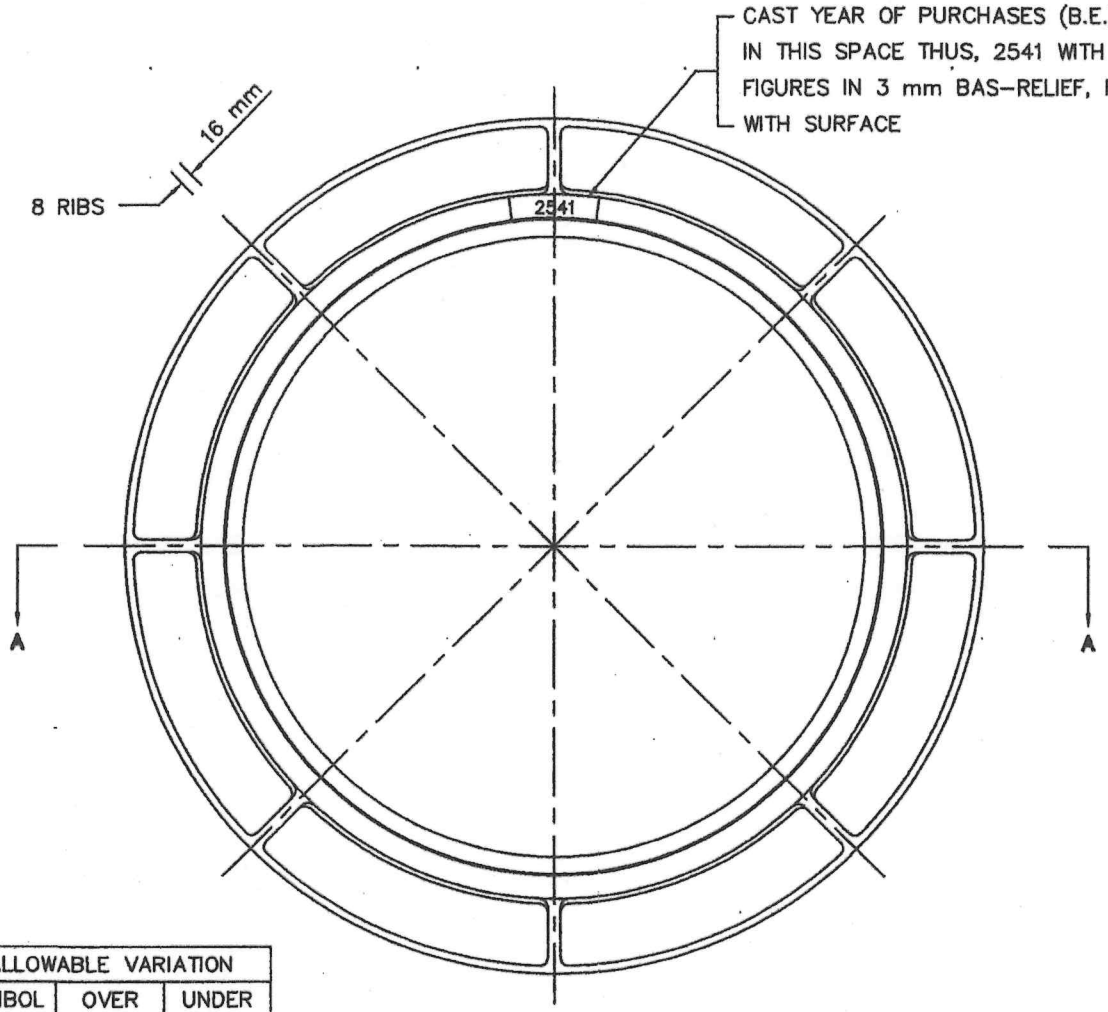

ALLOWABLE VARIATION		
SYMBOL	OVER	UNDER
C	1.5 mm	1.5 mm

MANHOLE FRAME

(CODE NO. 5620-636-31800)

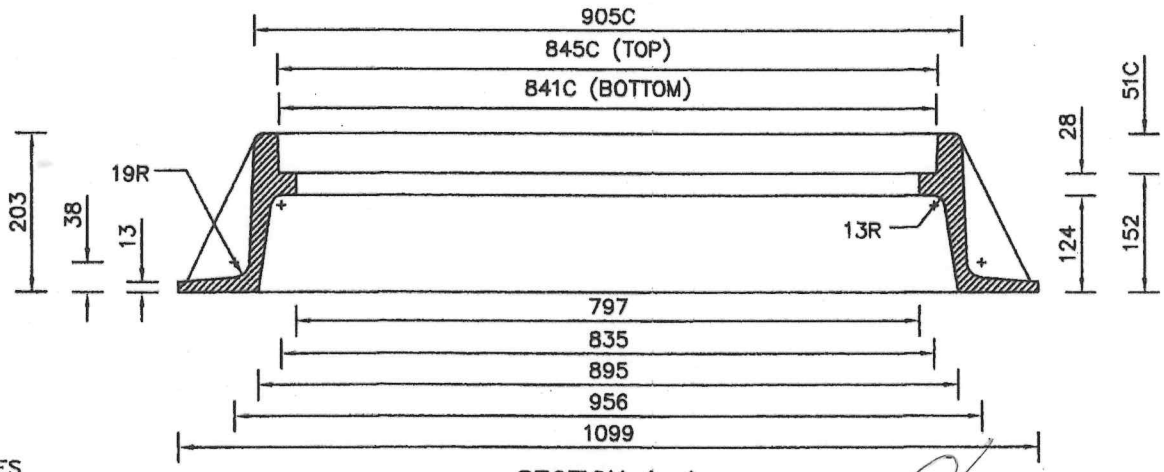

SECTION A-A

NOTES

1. DIMENSIONS ARE IN mm.
2. MATERIAL : SEMI-STEEL OR CAST IRON

REV. NO.	DESCRIPTION OF REVISIONS	BY	DATE
2	REVISED CODE NO. OF MANHOLE FRAME	Nonthd	10/1/61
1	CHANGED MONTH-YEAR OF MANUFACTURE TO YEAR OF PURCHASES (B.E.)	Prayuch	26/10/41

DR. Apichart T. CHK. Sunchart B.	METROPOLITAN ELECTRICITY AUTHORITY	SCALE NONE
DIV. CHIEF Sunchart B.	MANHOLE FRAME FOR 840 MM. DIA. MANHOLE COVER	SUPERSEDING 2801
EXC. MGR. T.H.		SH. NO. 1 OF 3
DTY. GEN. MGR. Prayuch		DWG. NO. UG-2-240
DATE 31/3/2530		

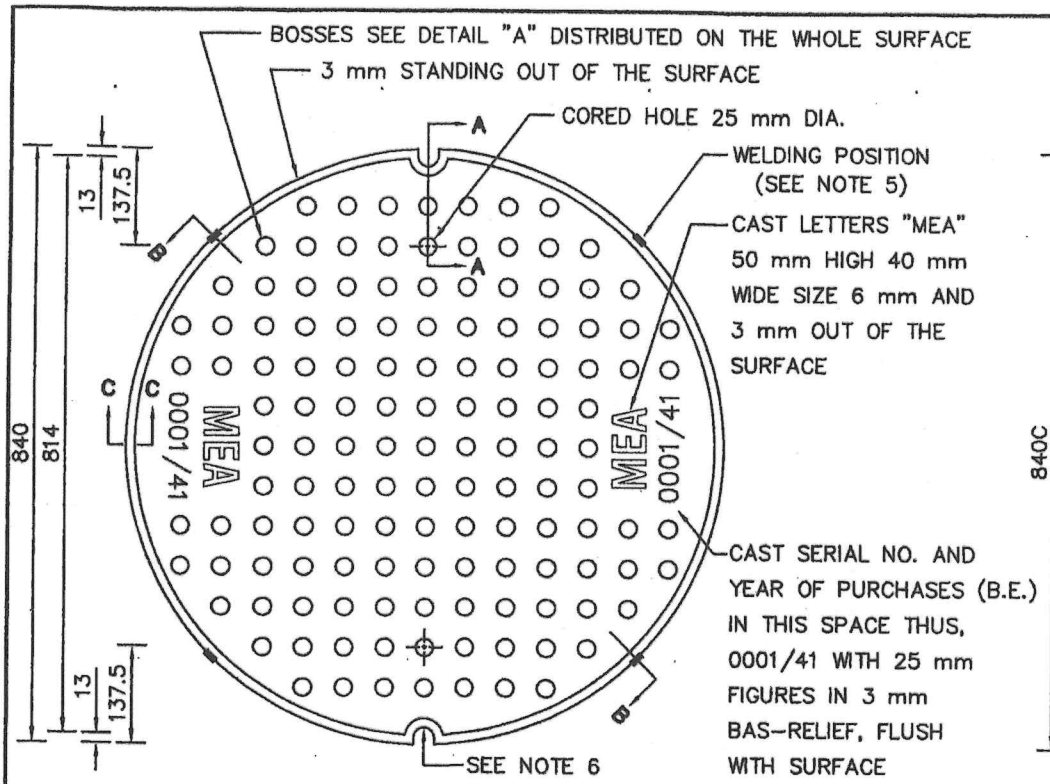

TOP VIEW

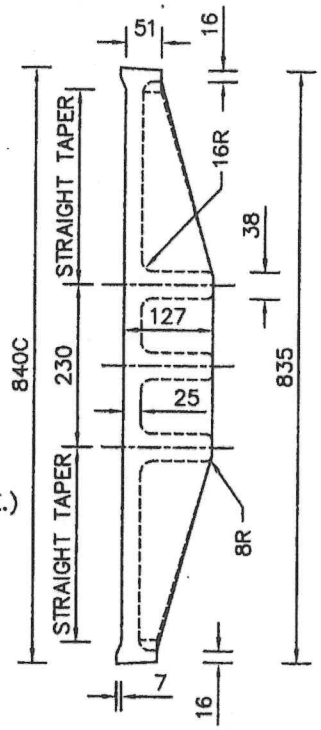

SECTION B-B

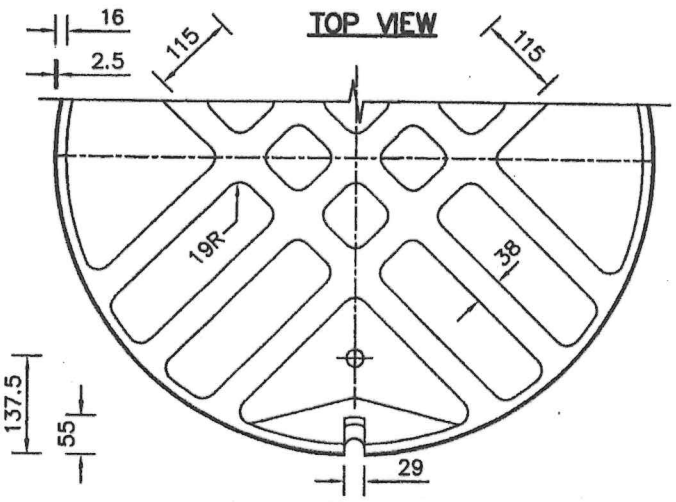

BOTTOM VIEW

ALLOWABLE VARIATION		
SYMBOL	OVER	UNDER
C	1.5 mm	1.5 mm

MANHOLE COVER

(CODE NO. 5620-636-31000)

NOTES

1. DIMENSIONS ARE IN mm.
2. THE COVER SHALL BE EVENLY PLACED ON ITS FRAME WITHOUT MINOR ROCKING. IN CASE OF UNEVENLY SEATING OR MINOR ROCKING, SEATING SURFACE MUST BE MACHINED.
3. MATERIAL : CAST IRON. REFERENCE : DWG.NO.10A1-0018
4. TO BE CONTINUED ON SH.NO.3
5. FRAME AND COVER SHALL BE JOINTED BY BUTT WELDING AT FOUR JOINTS, WITH UNIC100 CAST IRON RODE EACH OF 2 cm LONG AND 6 mm THICKNESS.
6. TWO HOLES SHALL BE COVERED BY SHEET STEEL BUTT WELDED TO JOINT BETWEEN FRAME AND COVER WITH UNIC100 CAST IRON RODE

REV.NO.	DESCRIPTION OF REVISIONS	BY	DATE
2	REVISED TITLE	Nonthol	10/1/61
1	REVISED NOTE 5, ADDED NOTE 6 AND CHANGED MONTH-YEAR OF MANUFACTURE TO SERIAL NO.-YEAR OF PURCHASES (B.E.)	Pongsak	26/10/41

DR. Poramy	CHK. Somkid.	METROPOLITAN ELECTRICITY AUTHORITY	SCALE 1:10
DIR.DIV. Suchart B.		840 mm DIA. MANHOLE COVER	SUPERSEDING
DIR.DEPT. T.H.			SH.NO. 2 OF 3
DEP.GOV. Pongsak			DWG. NO. UG-2-240
DATE 31/3/2530			

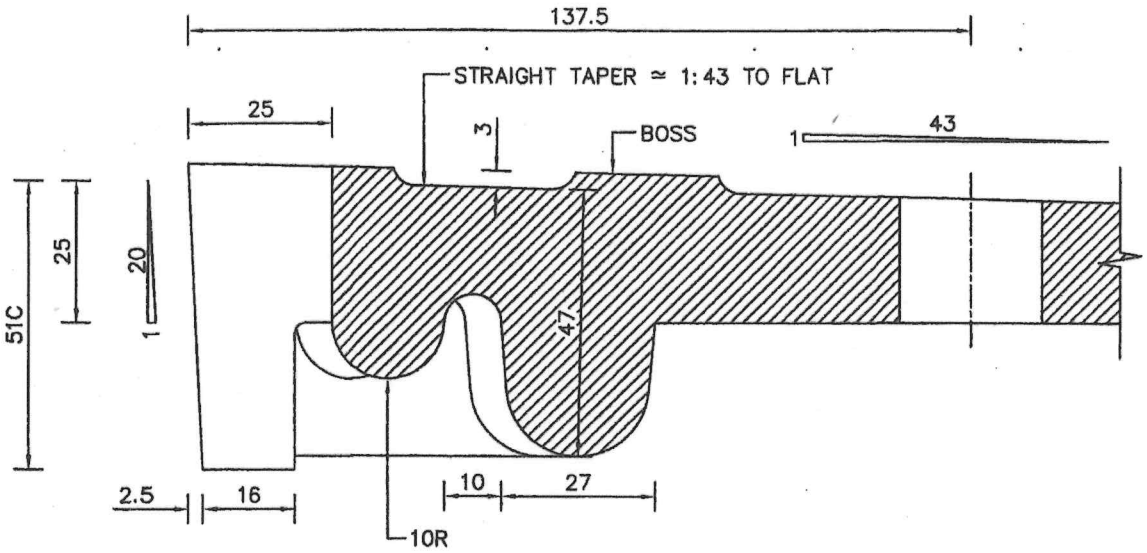

SECTION A–A

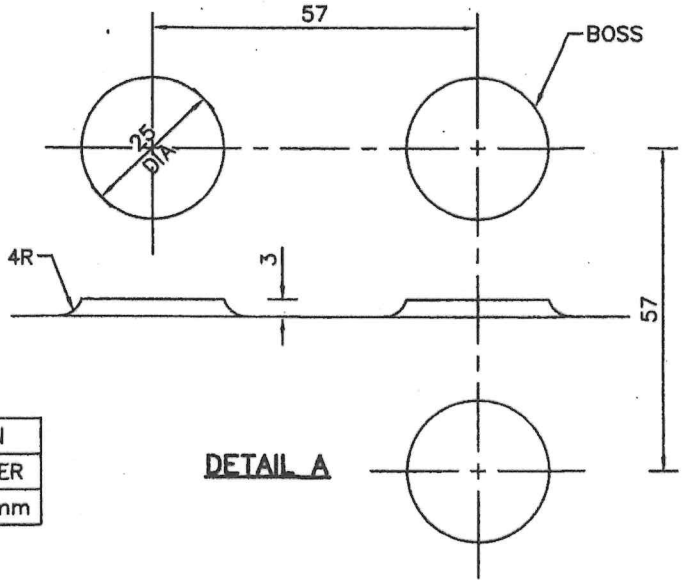

DETAIL A

ALLOWABLE VARIATION		
SYMBOL	OVER	UNDER
C	1.5 mm	1.5 mm

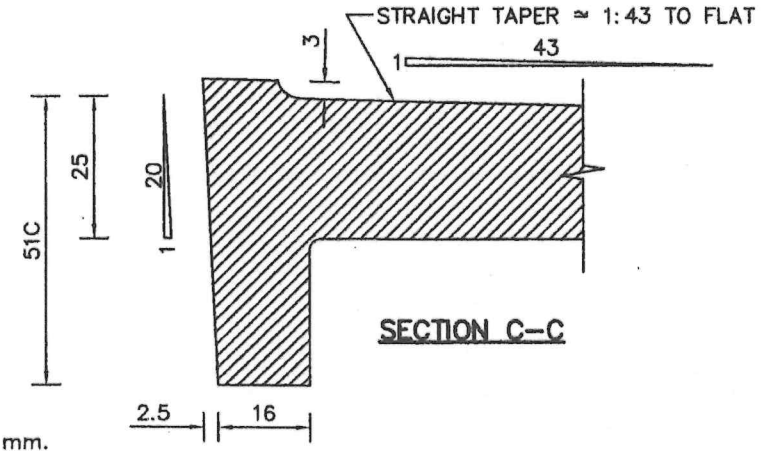

SECTION C–C

DIMENSIONS ARE IN mm.

1	REVISED TITLE	Monthol	10/1/61
REV. NO.	DESCRIPTION OF REVISIONS	BY	DATE

DR.	CHK.	METROPOLITAN ELECTRICITY AUTHORITY	SCALE 1:1.25
DIV. CHIEF Sudhart B.		840 mm DIA. MANHOLE COVER	SUPERSEDING 2802
EXC. MGR. T.H.			SH. NO. 3 OF 3
DTY. GEN. MGR. Bonginid			DWG. NO. UG-2-240
DATE 31/3/2530			

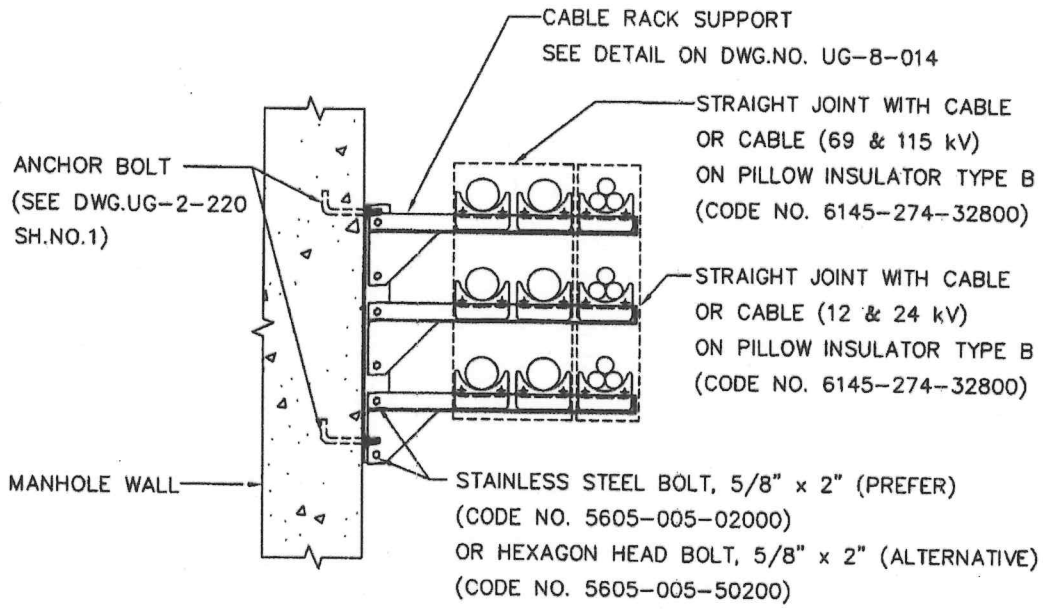

EXAMPLE 1

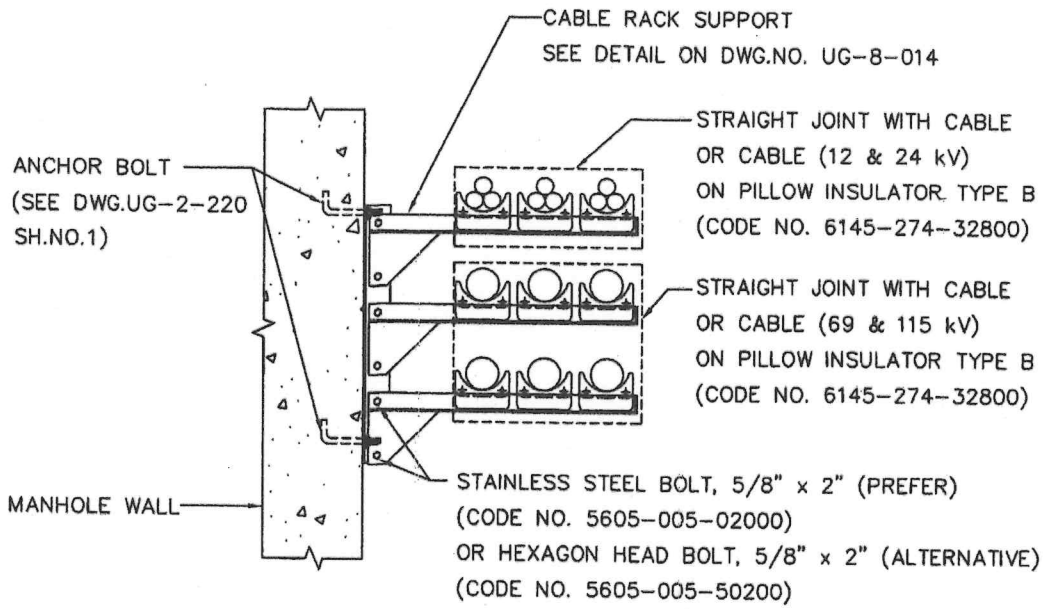

EXAMPLE 2

TYPICAL UG.CABLE INSTALLATION ON CABLE RACK SUPPORT

REV.NO.	DESCRIPTION OF REVISIONS	BY	DATE

DR. Pornchai	CHK. Pongsan	METROPOLITAN ELECTRICITY AUTHORITY	SCALE NONE
DIR.DIV. R Thu		TYPICAL UG.CABLE INSTALLATION ON CABLE RACK SUPPORT	SUPERSEDING
DIR.DEPT. Suriachai			SH.NO. 1 OF 1
DEP.GOV. Ugo			DWG. NO. UG-2-221
DATE 6/6/2551			

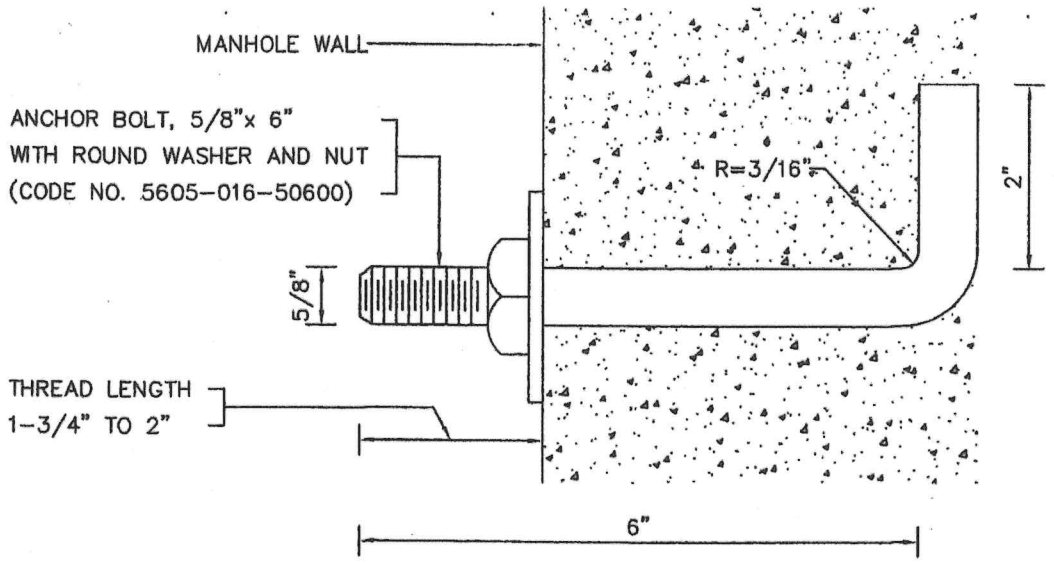

FIG.1 ANCHOR BOLT INSTALLATION (TYPICAL)

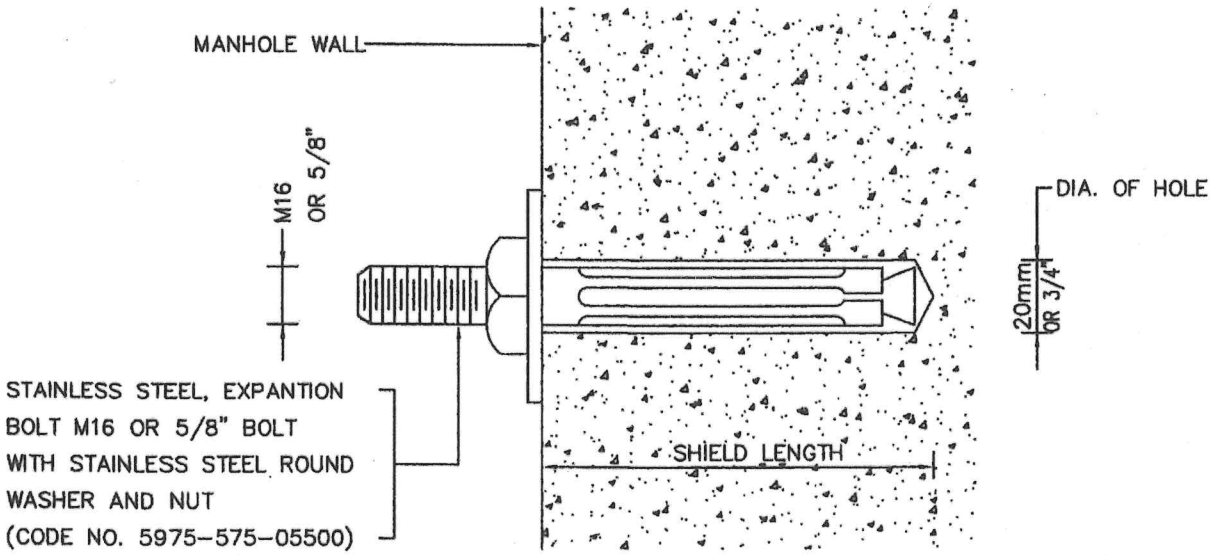

FIG.2 EXPANSION BOLT INSTALLATION (TYPICAL)

NOTE FOR MORE DETAIL, SEE MEA'S SPECIFICATION.

REV. NO.	DESCRIPTION OF REVISIONS	BY	DATE
3	REVISED CODE NO.	Monthol	18/5/61
2	CHANGED DRILL HOLE SIZE OF EXPANSION BOLT FROM 16 mm TO 20 mm OR 3/4" & ADDED DRILL HOLE DEPTH.	Pongsak	29/6/47
1	CHANGE THE USE OF EXPANSION BOLT (STEEL) 3/8" TO STAINLESS STEEL EXPANSION BOLT 5/8	Pongsak	5/9/45

DR. Somy. CHK. Sombat	METROPOLITAN ELECTRICITY AUTHORITY	SCALE NONE
DIV.CHIEF Suchart B.	ANCHOR BOLT AND EXPANSION BOLT FOR UG. CABLE RACK INSTALLATION	SUPERSEDING 2412
EXC. MGR. T.H.		SH.NO. 1 OF 3
DTY.GEN.MGR. Pongsak		DWG. NO. UG-2-220
DATE 31/3/2530		

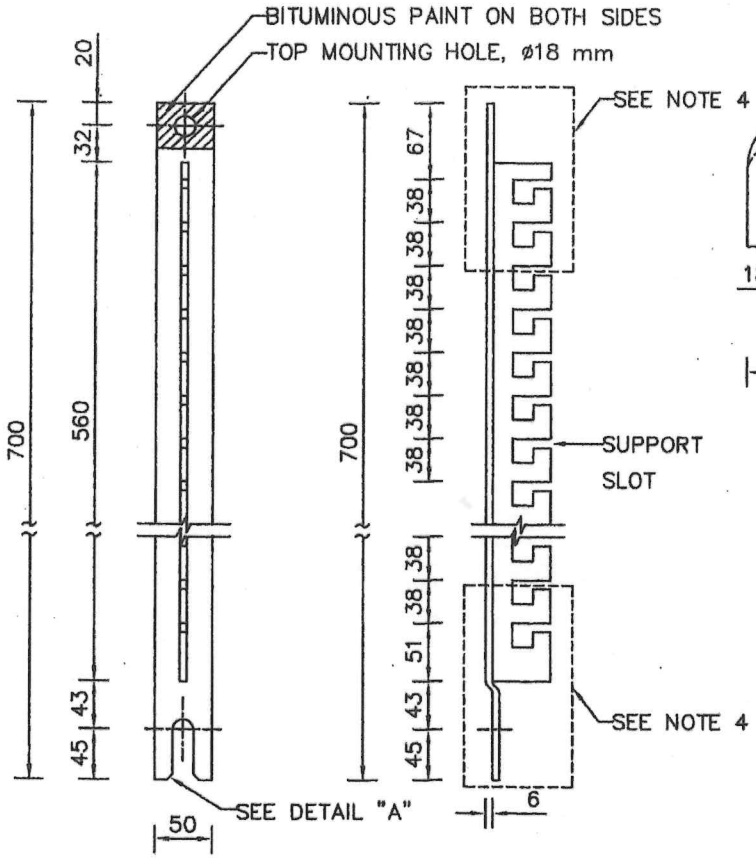

14-HOLE UG. CABLE RACK

(CODE NO.6145-268-01400) SEE NOTE 4

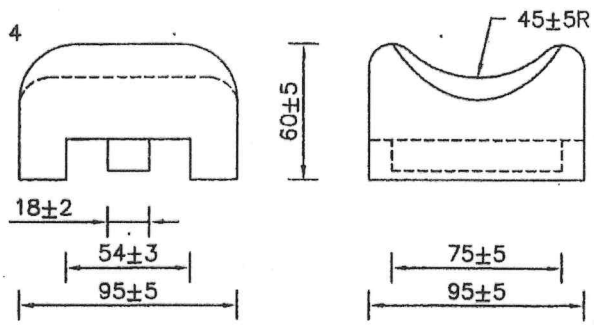

END VIEW SIDE VIEW

PILLOW INSULATOR (TYPE A)

(CODE NO.6145-268-02400)

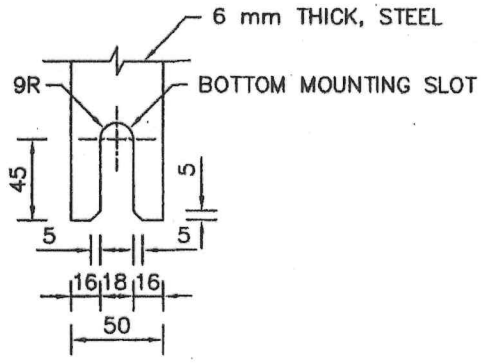

DETAIL "A"

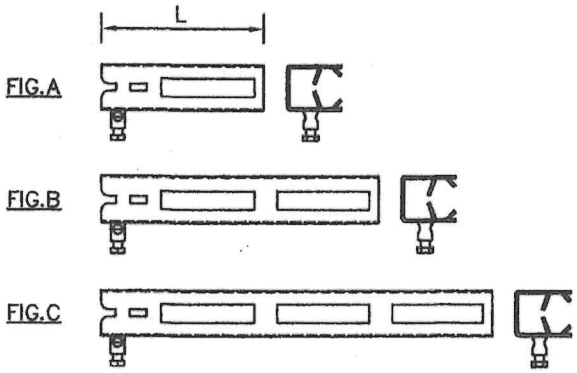

UNDERGROUND CABLE SUPPORT			
FIG.	CODE NO.	MAXIMUM NUMBER OF INSULATORS	LENGTH (L) mm
A	6145-268-02100	1	175
B	6145-268-02200	2	300
C	6145-268-02300	3	425

UNDERGROUND CABLE SUPPORT

(SEE DWG.NO. UG-8-013)

NOTES
1. DIMENSIONS ARE IN mm.
2. AFTER FABRICATION, THE STEEL UG. CABLE RACK & SUPPORT SHALL BE GALVANIZED BY HOT-DIP PROCESS. THE MINIMUM AVERAGE THICKNESS OF ZINC COATING AS PER ASTM A123/A123M.
3. SEE COMPLETE INSTALLATION ON SH.NO.3
4. SEE DWG.NO. UG-8-011 FOR MORE DETAILS OF UG. CABLE RACK.

REV. NO.	DESCRIPTION OF REVISIONS	BY	DATE
3	REVISED DIMENSIONS, DETAILS & NOTE 2	Monthol	18/5/61
2	REVISED DIMENSIONS OF PILLOW INSULATOR & ADDED TYPE OF PILLOW INSULATOR(TYPE A)	Pongsan	29/6/47
1	REVISED DRAWINGS AND NOTE 2	Sombat	11/1/33

DR.	CHK. Sombat	METROPOLITAN ELECTRICITY AUTHORITY	SCALE NONE
DIV. CHIEF Suchart B.		UG. CABLE RACK, SUPPORT AND PILLOW INSULATOR FOR SUPPORTING UG. CABLE & SPLICE UP TO 400 mm²	SUPERSEDING 2412
EXC. MGR. T.H.			SH.NO. 2 OF 3
DTY.GEN.MGR.			DWG NO. UG-2-220
DATE 31/3/2530			

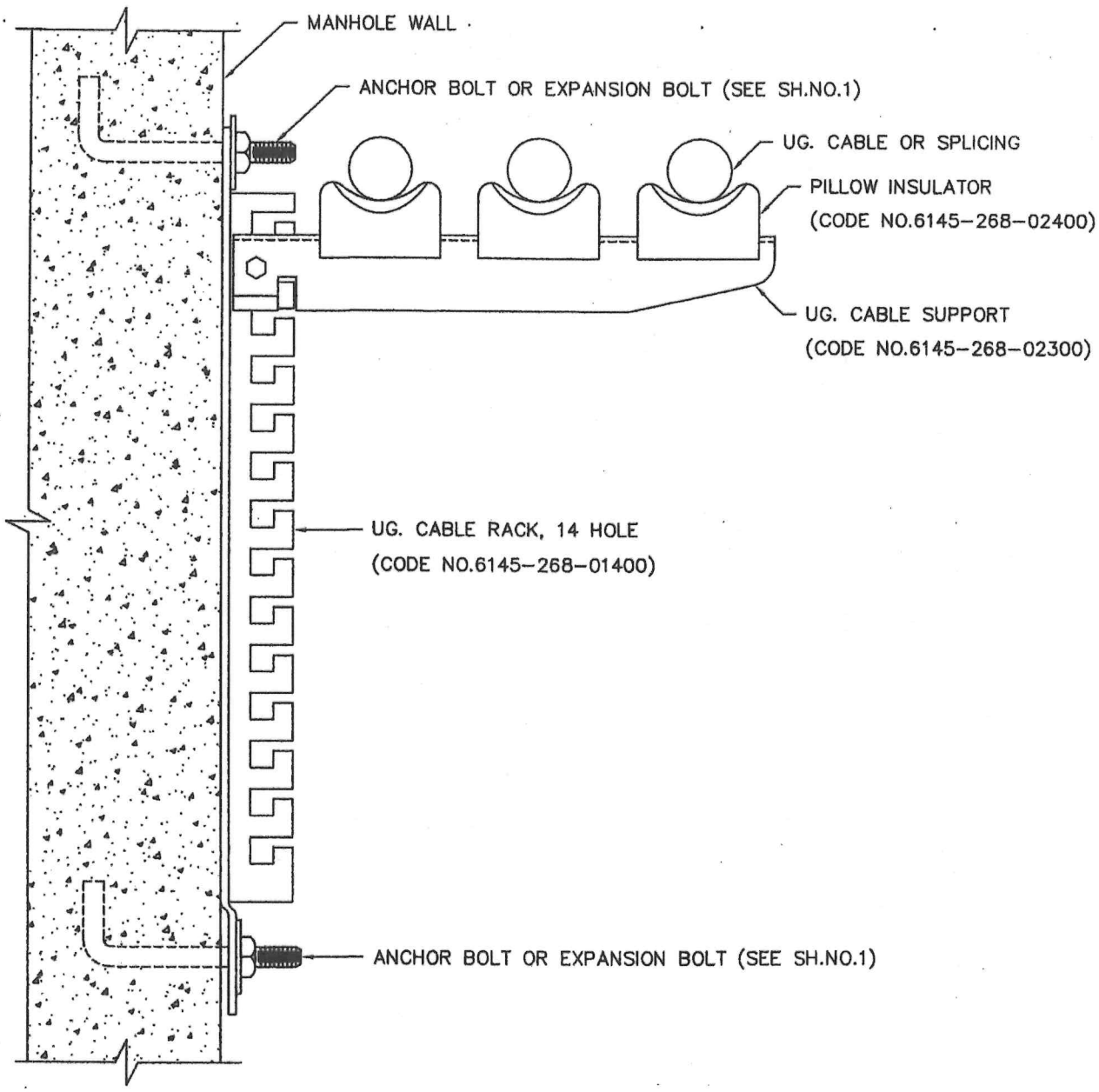

TYPICAL INSTALLATION OF UG. CABLE ON UG. CABLE RACK

NOTE SEE GROUNDING PRACTICE FOR SPLICED CABLE & CABLE RACK IN DWG.NO. UG-10-006 & UG-10-007 RESPECTIVELY.

REV. NO.	DESCRIPTION OF REVISIONS	BY	DATE
1	REVISED CODE NO. & ADDED NOTE	Monthol	18/5/61

DR.	CHK. Sombat	METROPOLITAN ELECTRICITY AUTHORITY	SCALE NONE
DIV. CHIEF Suchart B.		UG. CABLE RACK, SUPPORT AND PILLOW INSULATOR FOR SUPPORTING UG. CABLE & SPLICE UP TO 400 mm²	SUPERSEDING 2412
EXC. MGR. T.H.			SH. NO. 3 OF 3
DIV. GEN. MGR. Bangon I			DWG. NO. UG-2-220
DATE 31/3/2530			

PULLING IRON

(CODE NO. 5615-044-81200 SEE DWG.NO. UG-8-012)

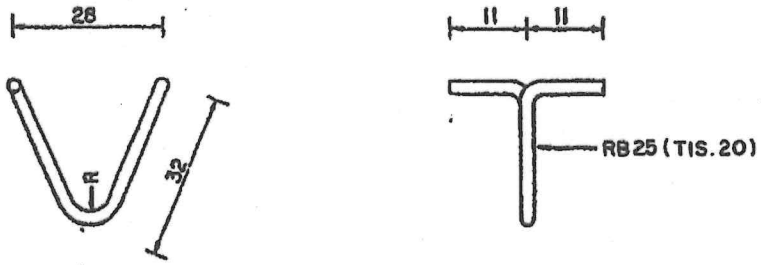

TOP VIEW
(R=30 ± 5 mm)

SIDE VIEW

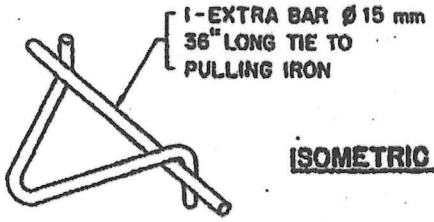

ISOMETRIC VIEW

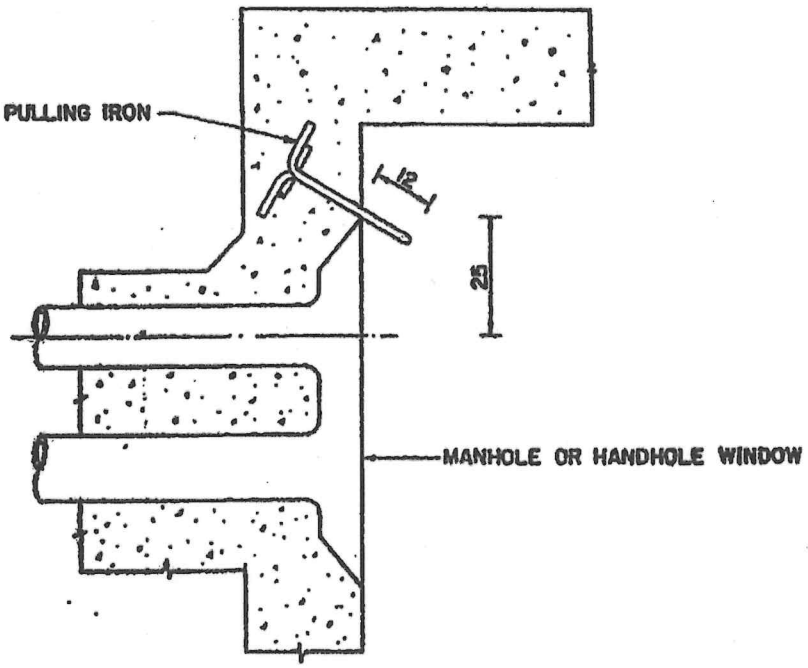

FIG.1 UPPER PULLING IRON

NOTES.
1. DIMENSIONS ARE IN UNLESS OTHERWISE SPECIFIED.
2. PULLING IRON SHALL BE HOT-DIP GALVANIZED AFTER FORMING. THE MINIMUM AVERAGE OF ZINC-COATING AS PER ASTM A123/123M.
3. LOCATION OF PULLING IRON IN MANHOLE SHALL BE IN LINE WITH OPPOSITE DUCT BANK CENTER LINE.

REV. NO.	DESCRIPTION OF REVISIONS	BY	DATE
1	CHANGED SIZE OF STEEL ROUND BAR FROM ø 22 mm TO ø 25 mm (RB 25) AND REVISED NOTE 2	VTT	18/5/54

DR.	CHK.	METROPOLITAN ELECTRICITY AUTHORITY
DIV.CHIEF		PULLING IRON INSTALLATIONS FOR MANHOLE AND HANDHOLE
EXC.MGR.	T.H.	
DTY.GEN.MGR.		
DATE	31/3/2530	

SCALE: NONE
SUPERSEDING 2407
SH.NO. 1 OF 3
DWG. NO. UG-2-210

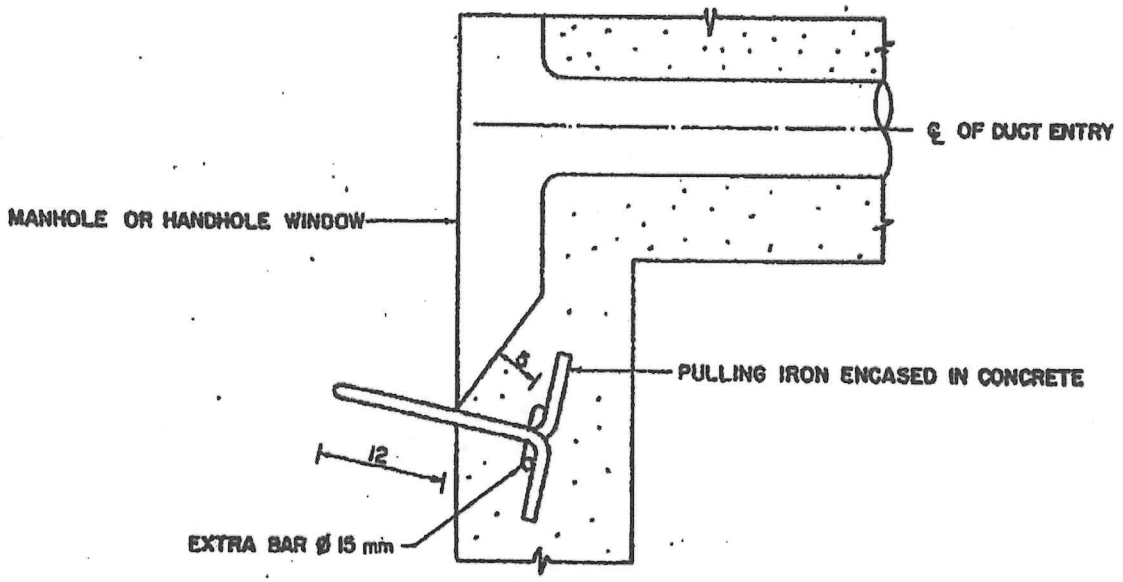

FIG. 2 LOWER PULLING IRON (TYPE I)

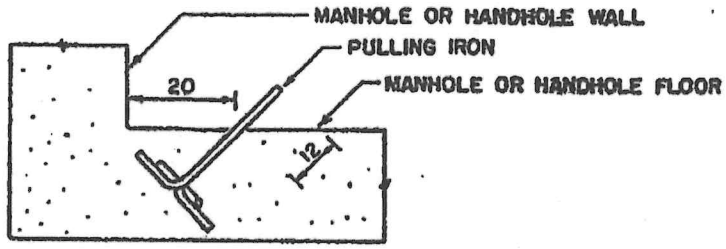

FIG. 3 LOWER PULLING IRON (TYPE 2)

NOTE. DIMENSIONS ARE IN cm

--- 1	CHANGED POSITION OF PULLING IRON	Sombat	7/9/32
REV. NO.	DESCRIPTION OF REVISIONS	BY	DATE

DR.	CHK. Sombat	METROPOLITAN ELECTRICITY AUTHORITY	SCALE NONE
DIV. CHIEF Sukavt B.		PULLING IRON INSTALLATIONS FOR MANHOLE AND HANDHOLE	SUPERSEDING 2407
EXC. MGR. T.H.			SH. NO. 2 OF 3
DTY. GEN. MGR.			DWG. NO. UG-2-210
DATE 31/3/2530			

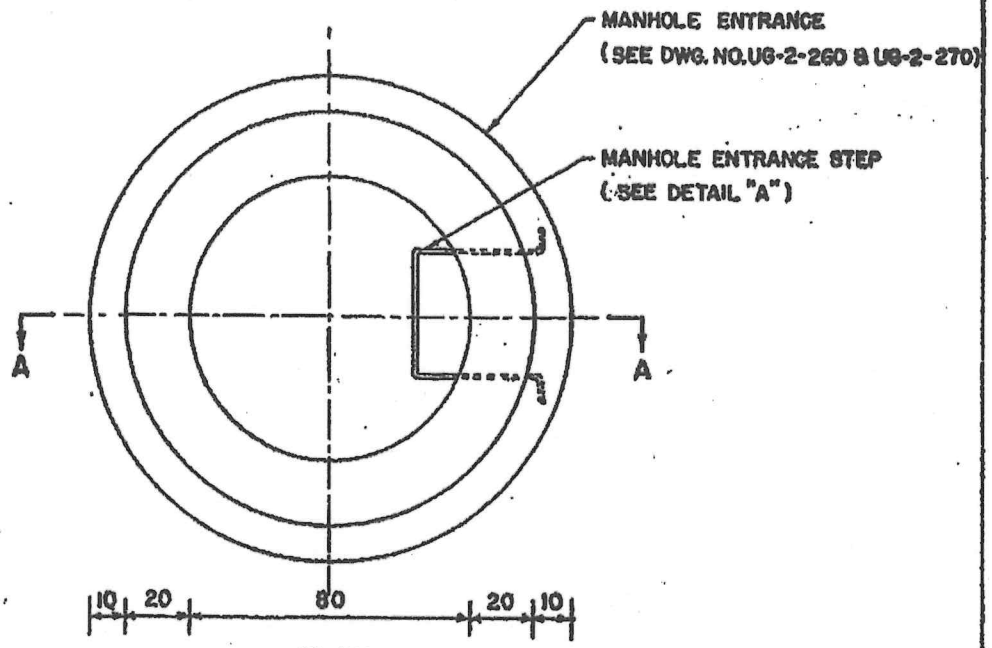

PLAN

MANHOLE ENTRANCE WITHOUT COVER

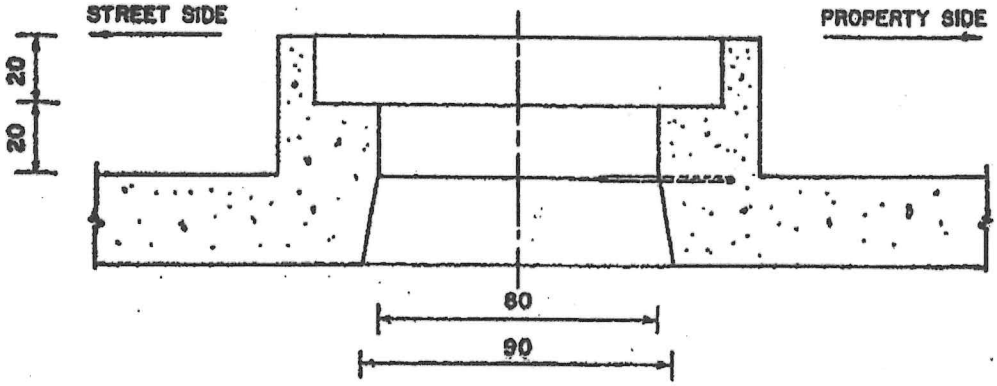

SECTION A-A

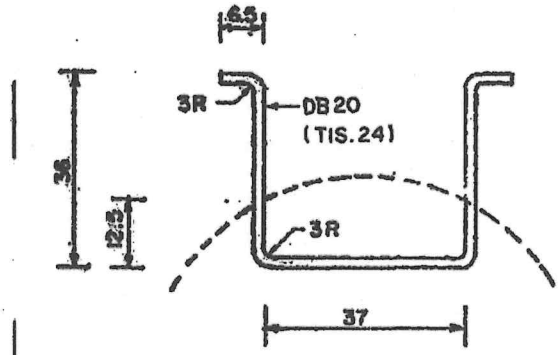

DETAIL "A"

MANHOLE ENTRANCE STEP

(CODE NO. 5620-636-00100)

NOTES.

1. DIMENSIONS ARE IN cm
2. MANHOLE ENTRANCE SHALL HAVE AT LEAST ONE MANHOLE ENTRANCE STEP AS SHOWN IN DRAWING.
3. IN CASE OF RESURFACING OF STREET SURFACE, THE HIGHER RECONSTRUCTED MANHOLE ENTRANCE SHALL HAVE MANHOLE ENTRANCE STEP EVERY 40 cm INTERVAL.
4. MANHOLE ENTRANCE STEP SHALL BE HOT-DIP GALVANIZED AFTER FORMING. THE MINIMUM AVERAGE OF ZINC-COATING AS PER ASTM 123/123M.

REV. NO.	DESCRIPTION OF REVISIONS	BY	DATE
1	CHANGED SIZE & TYPE OF MANHOLE ENTRANCE STEP TO DB 20 AND REVISED NOTE 4		18/5/54

DR.	CHK.	METROPOLITAN ELECTRICITY AUTHORITY	SCALE NONE
DIV. CHIEF		MANHOLE ENTRANCE STEP	SUPERSEDING
EXC. MGR.	T.H.		SH. NO. 3 OF 3
DIV. GEN. MGR.			DWG. NO. UG-2-210
DATE	31/3/2530		

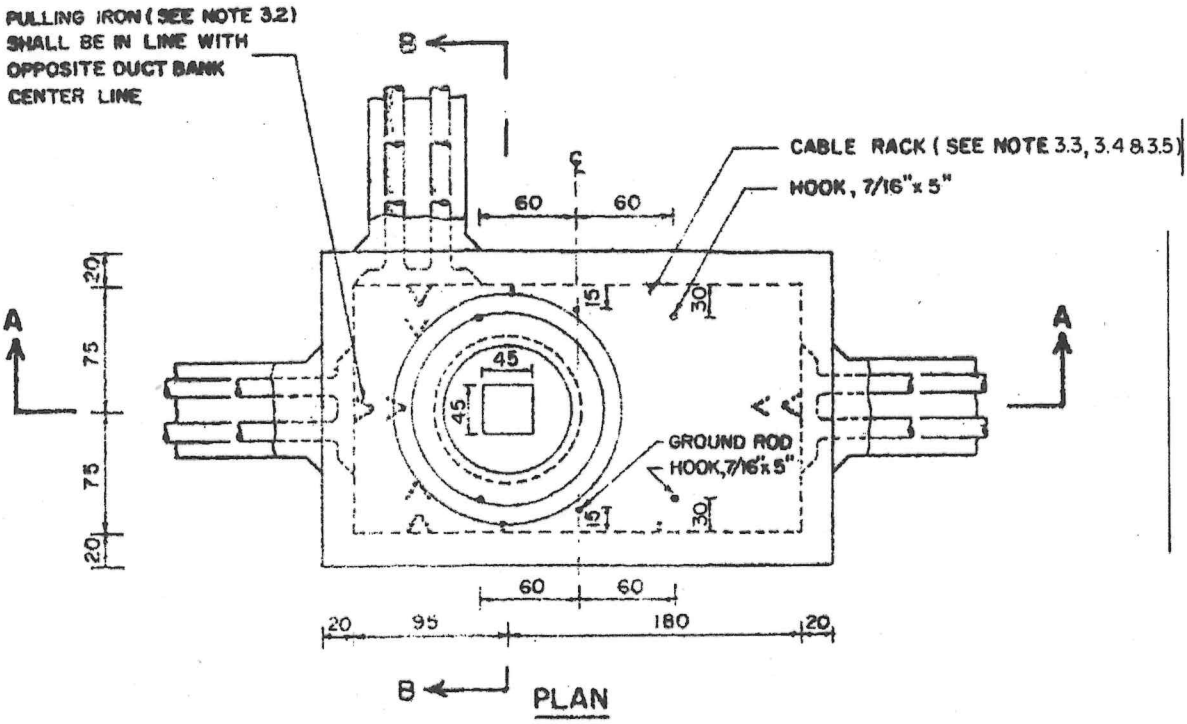

PLAN

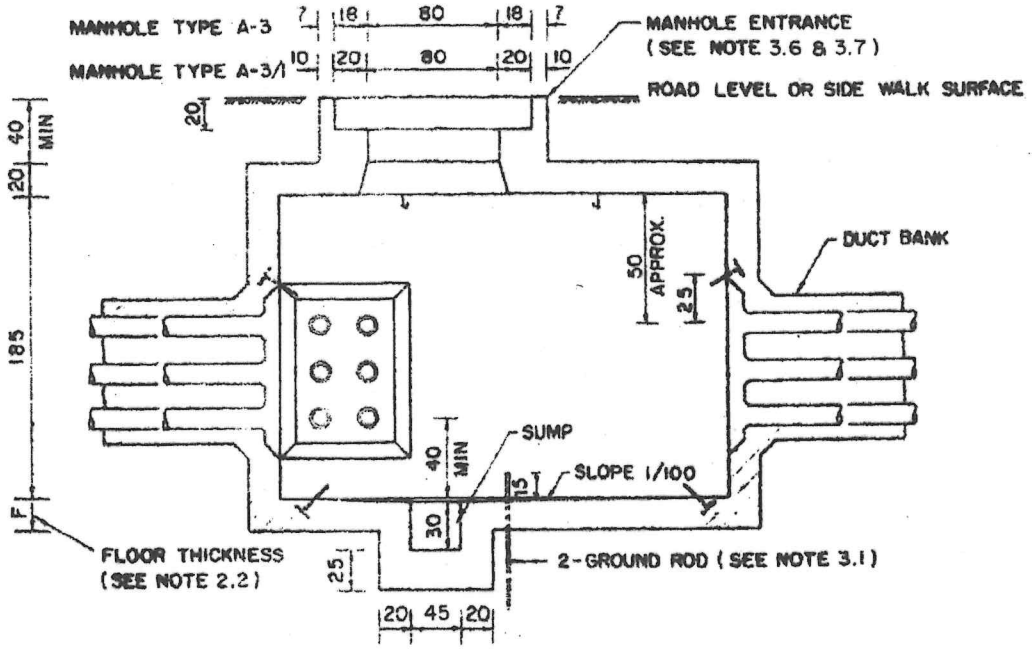

SECTION A-A

REV. NO.	DESCRIPTION OF REVISIONS	BY	DATE
2	CHANGED SIZE OF SUMP & POSITION OF HOOK AND REVISED WORDING	Nattha	5/11/55
1	CHANGED POSITION OF PULLING IRON AND DRIVE HOOK	Sombat	7/9/32

DR. Apichart	CHK. Sombat	METROPOLITAN ELECTRICITY AUTHORITY	SCALE NONE
DIV. CHIEF Sinchart B.		MANHOLE TYPE A-3 AND A-3/1 FOR 12/24 KV. UNDERGROUND CONSTRUCTION	SUPERSEDING 2405
EXC. MGR. T.H.			SH. NO. 1 OF 3
DTY. GEN. MGR. Bmisuil			DWG NO. UG-2-012
DATE 31/3/2530			

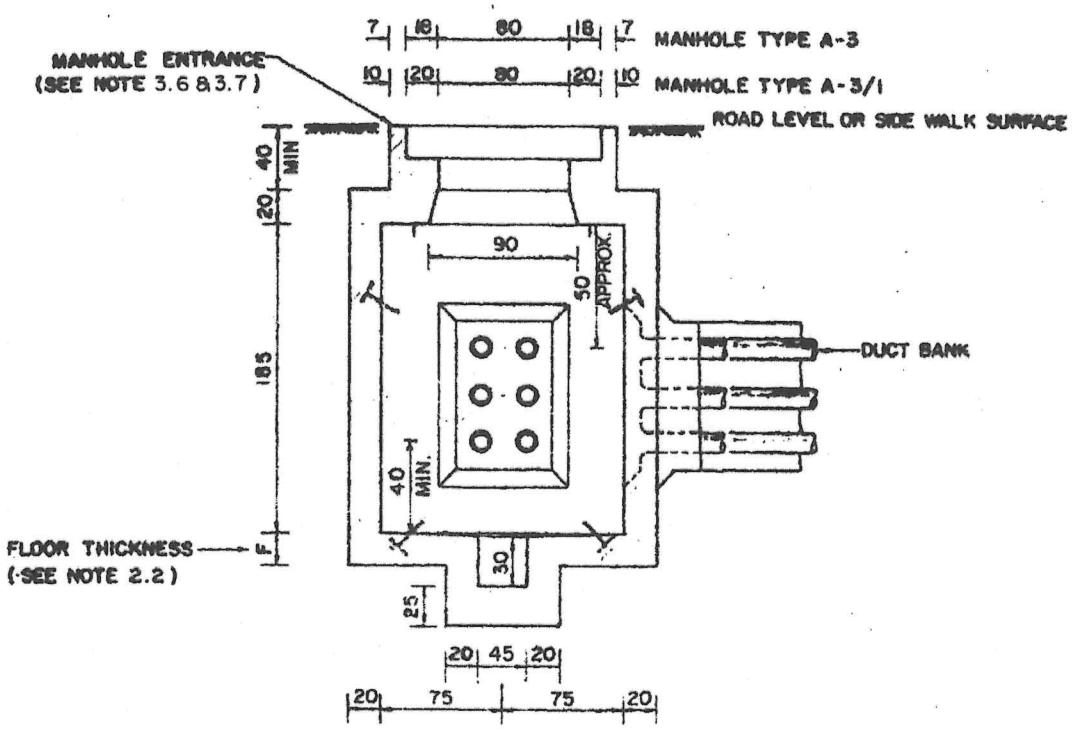

SECTION B-B

APPLICATIONS

1. MANHOLE TYPES A-3 AND A-3/1 ARE SMALL-SIZED 3-WAY MANHOLES THAT ARE GENERALLY USED FOR 12 OR 24 KV. UNDERGROUND CONSTRUCTION INSIDE AND OUTSIDE NETWORK AREA.
2. MANHOLE TYPE A-3/1 IS DEVELOPED FROM MANHOLE TYPE A-3 AND CAN BE CONSTRUCTED AT LOCATION WHERE IT IS SUBJECTED TO 18 TONS MAX. TRUCK LOAD.

REV. NO.	DESCRIPTION OF REVISIONS	BY	DATE
2	CHANGED SIZE OF SUMP & POSITION OF HOOK AND REVISED WORDING	Hongthed	5/11/55
1	CHANGED POSITION OF PULLING IRON AND DRIVE HOOK	Sunchart	7/9/32

DR. Apichart T.	CHK. Sunchart	METROPOLITAN ELECTRICITY AUTHORITY	SCALE NONE
ENG. CHIEF Sunchart B.		MANHOLE TYPE A-3 AND A-3/1 FOR 12/24 KV. UNDERGROUND CONSTRUCTION.	SUPERSEDING 2405
ENG. MGR. T.H.			SH. NO. 2 OF 3
DIV. GEN. MGR. Bongmit			DWG. NO. UG-2-012
DATE 31/3/2530			

NOTES.

1. DIMENSIONS ARE IN cm
2. THE MAIN DIFFERENCES OF MANHOLE TYPE A-3 AND A-3/1 ARE SHOWN IN THE TABLE BELOW:

NO.	DESCRIPTION	DIFFERENCES OF MANHOLE	
		TYPE A-3	TYPE A-3/1
2.1	REFERENCE DWG. NO.	08D-001,002	08D-003/1
2.2	FLOOR THICKNESS (F),CM	23	20
2.3	NO. AND SIZE OF PILES	15-Ø5"x5M.	15-Ø6"x3M.
2.4	CAN BE SUBJECTED TO TRUCK LOAD (18 TONS MAX. LOAD)	NO.	YES

3. REFERENCE DWG. NO

NO.	DESCRIPTION	DWG.NO.
3.1	GROUND LOOP IN MANHOLE	UG-10-005
3.2	PULLING IRON AND ENTRANCE STEP	UG-2-210
3.3	CABLE RACK GROUNDING	UG-10-007
3.4	CABLE RACK AND ACCESSORIES	UG-2-220
3.5	CABLE RACK MOUNTING LOCATIONS	UG-2-100
3.6	MANHOLE FRAME AND MANHOLE COVER	UG-2-240
3.7	MANHOLE ENTRANCE REINFORCEMENT	UG-2-260

REV. NO.	DESCRIPTION OF REVISIONS	BY	DATE
1	REVISED NOTE 3.		5/11/55

DR. CHK.
DIV.CHIEF
EXC.MGR.
DTY.GEN.MGR.
DATE 31/3/2530

METROPOLITAN ELECTRICITY AUTHORITY

MANHOLE TYPE A-3 AND A-3/1
FOR
12/24 KV. UNDERGROUND CONSTRUCTION

SCALE
SUPERSEDING 2405
SH.NO. 3 OF 3
DWG. NO. UG-2-012

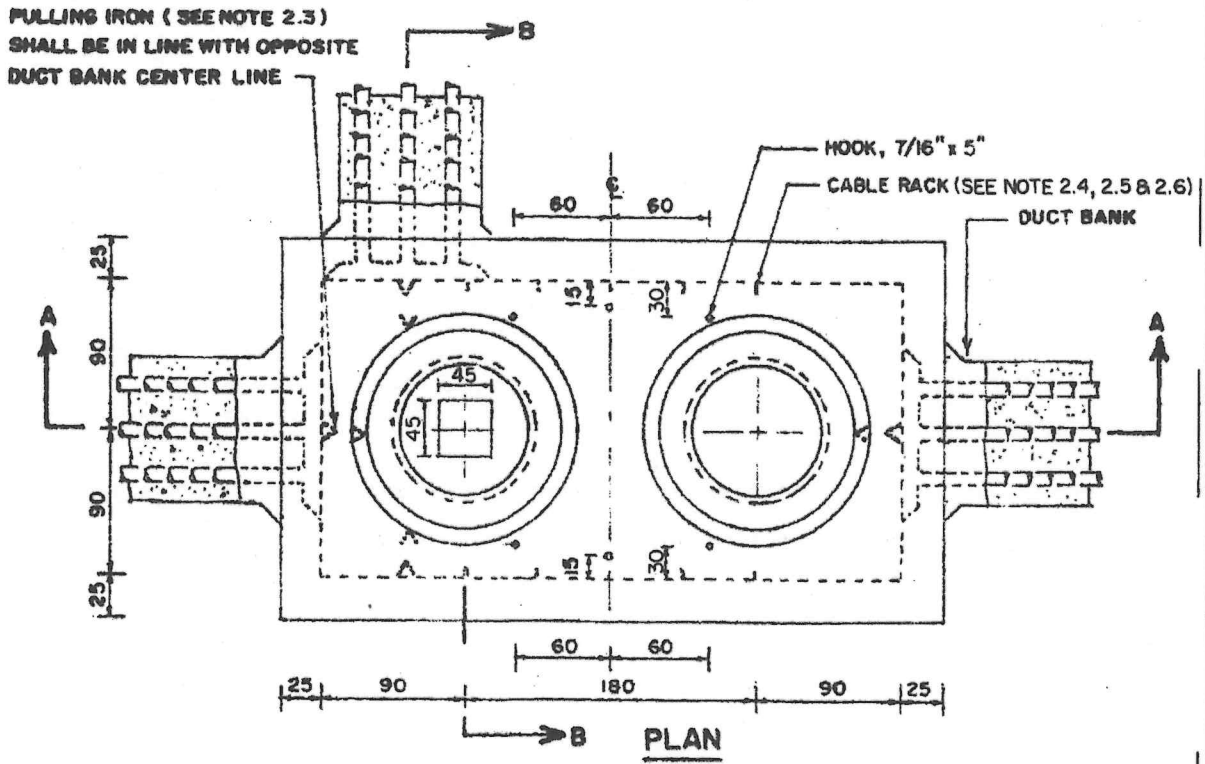

PLAN

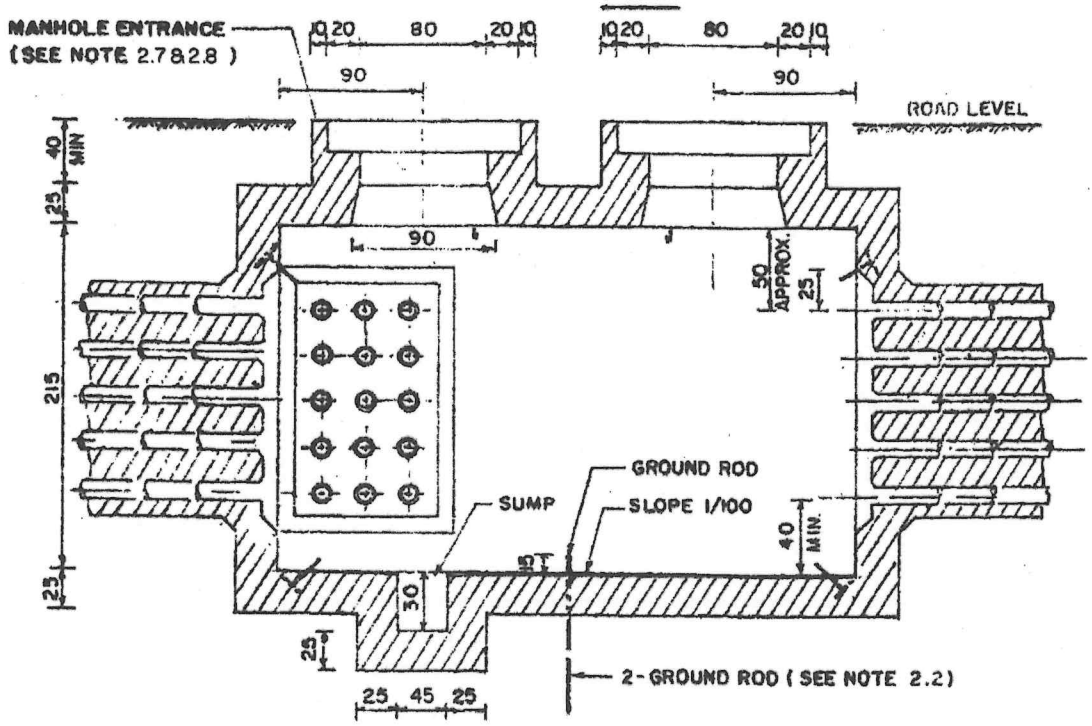

SECTION A-A

REV. NO	DESCRIPTION OF REVISIONS	BY	DATE
2	CHANGED SIZE OF SUMP & POSITION OF HOOK AND REVISED WORDING	Nontha	5/11/55
1	CHANGED POSITION OF PULLING IRON, DRIVE HOOK AND ADDED DUCT BANK	Sombat	7/9/32

DR. Gingy	CHK. Sombat	METROPOLITAN ELECTRICITY AUTHORITY	SCALE NONE
DIV. CHIEF Sombat B.		MANHOLE TYPE A-1/2 FOR 12/24 KV. UNDERGROUND CONSTRUCTION	SUPERSEDING
EXC. MGR. T.H.			SH. NO. 1 OF 3
DTY. GEN. MGR. Bonzmd			DWG NO. UG-2-014
DATE 31/3/2530			

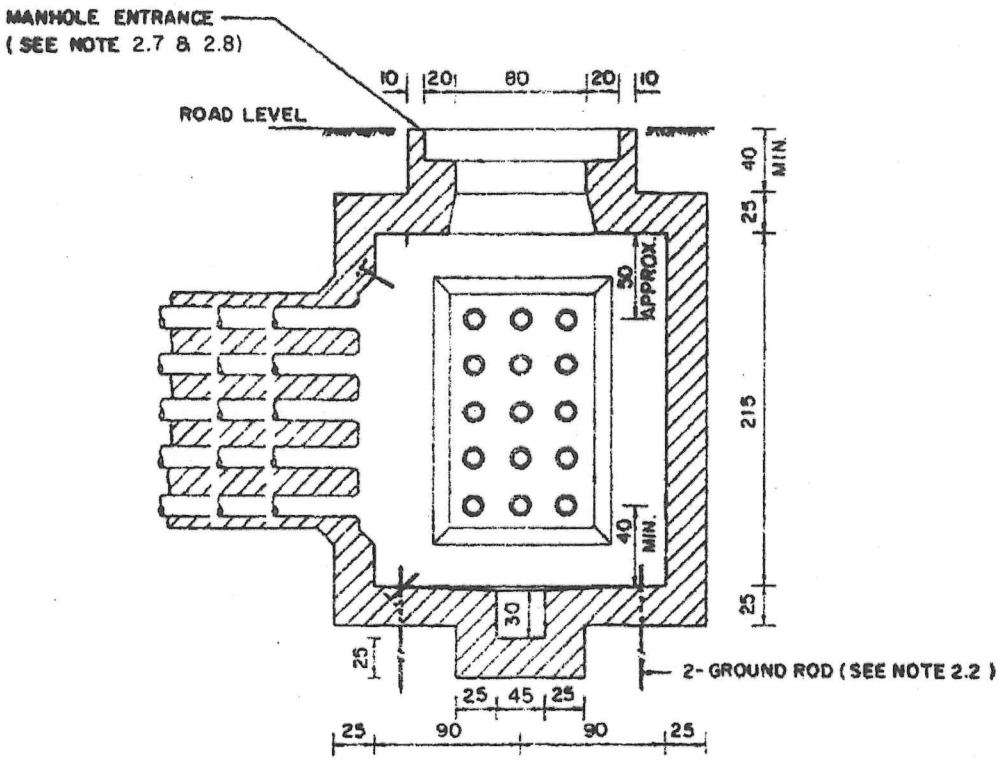

SECTION B-B

APPLICATIONS

MANHOLE TYPE A-1/2 IS LARGE-SIZED 2-ENTRANCE 3-WAY MANHOLE THAT IS GENERALLY USED FOR 12 OR 24 KV. UNDERGROUND CONSTRUCTION AND CAN BE CONSTRUCTED AT LOCATION WHERE IT IS SUBJECTED TO 18 TONS MAX. TRUCK LOAD.

REV. NO.	DESCRIPTION OF REVISIONS	BY	DATE
2	CHANGED SIZE OF SUMP & POSITION OF HOOK AND REVISED WORDING	Hoonthed	5/11/55
1	CHANGED POSITION OF PULLING IRON, DRIVE HOOK AND ADDED DUCT BANK.	Sumbat	7/9/32

DR. Apichart. CHK. Sumbat.	METROPOLITAN ELECTRICITY AUTHORITY	SCALE NONE
DIV. CHIEF Suchart B.	MANHOLE TYPE A-1/2 FOR 12/24 KV. UNDERGROUND CONSTRUCTION	SUPERSEDING
EXC. MGR. T.H.		SH. NO. 2 OF 3
DTY. GEN. MGR. Benjamin		DWG NO. UG-2-014
DATE 31/3/2530		

NOTES

1. DIMENSIONS ARE IN cm
2. REFERENCE DWG. NO.

NO.	DESCRIPTION	DWG.NO.
2.1	MANHOLE TYPE A-1/2	08A1-197
2.2	GROUND LOOP IN MANHOLE	UG-10-005
2.3	PULLING IRON AND ENTRANCE STEP	UG-2-210
2.4	CABLE RACK GROUNDING	UG-10-007
2.5	CABLE RACK AND ACCESSORIES	UG-2-220
2.6	CABLE RACK MOUNTING LOCATIONS	UG-2-100
2.7	MANHOLE FRAME AND MANHOLE COVER	UG-2-250
2.8	MANHOLE ENTRANCE REINFORCEMENT	UG-2-270

REV. NO.	DESCRIPTION OF REVISIONS	BY	DATE
1	REVISED NOTE 2	Hongthai	5/11/55

DR.	CHK. Sombat	METROPOLITAN ELECTRICITY AUTHORITY	SCALE NONE
DIV. CHIEF	Sudhart B.	MANHOLE TYPE A-1/2 FOR 12/24 KV. UNDERGROUND CONSTRUCTION	SUPERSEDING
EXC. MGR.	T.H.		SH. NO. 3 OF 3
DTY. GEN. MGR.	Bonyarit		DWG NO. UG-2-014
DATE	31/3/2530		

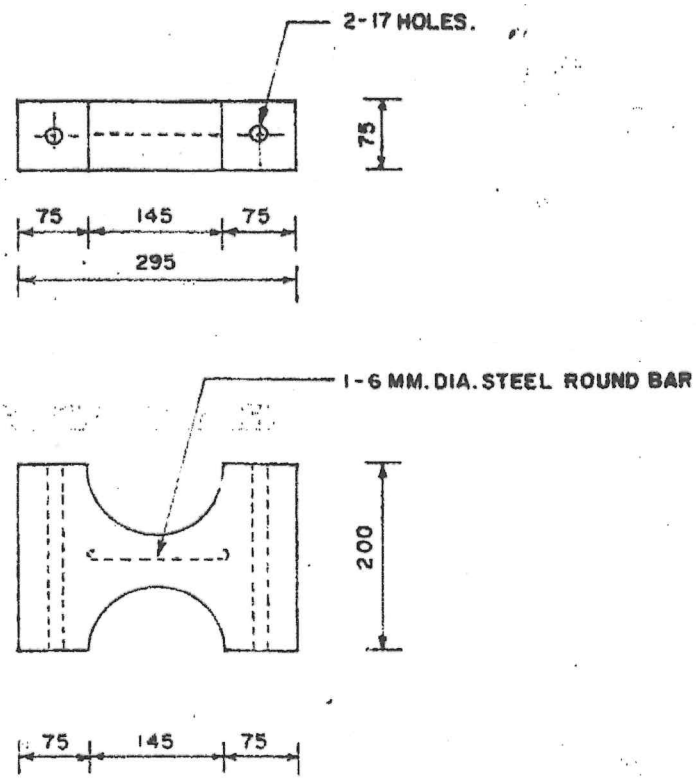

SPACER BLOCK

(FOR 1 DUCT)

NOTES 1. DIMENSIONS ARE IN MM.
2. APPLICATION : SEE DWG. NO. UG-3-100.

REV. NO.	DESCRIPTION OF REVISIONS	BY	DATE

DR.	CHK.	METROPOLITAN ELECTRICITY AUTHORITY	SCALE 1:75
DIV. CHIEF		CONCRETE SPACER BLOCK (FOR Ø 140 MM. HDPE CONDUIT)	SUPERSEDING
EXC. MGR.			SH. NO. 2 OF 3
DTY. GEN. MGR.			DWG NO. UG-8-002
DATE	2530		

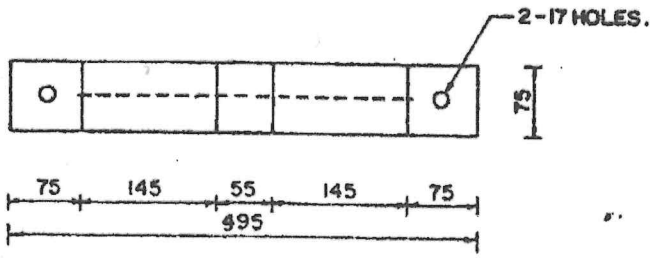

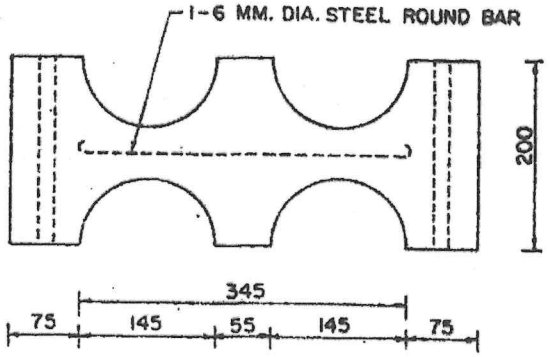

SPACER BLOCK

(FOR 2 DUCTS)

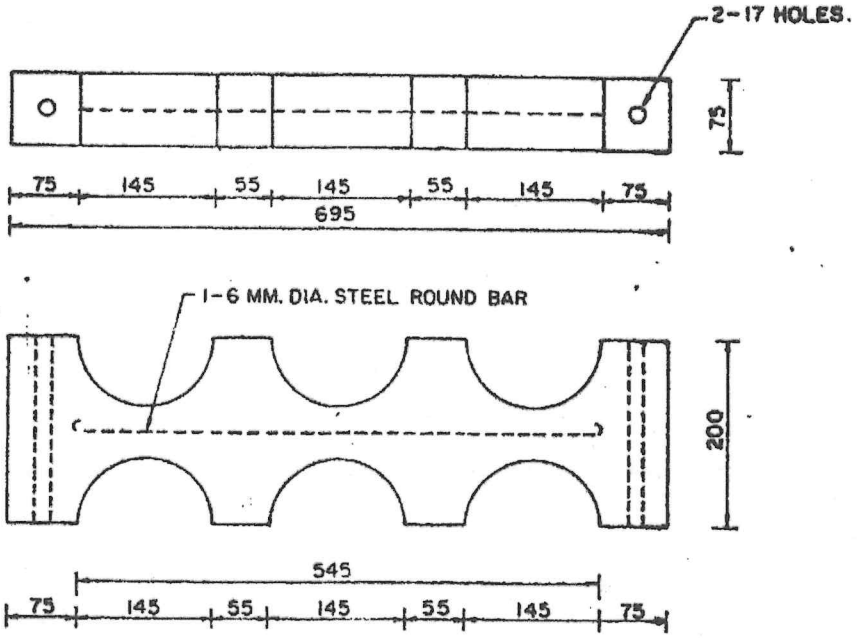

SPACER BLOCK

(FOR 3 DUCTS)

NOTES 1. DIMENSIONS ARE IN MM.

2. APPLICATION : SEE DWG. NO. UG-3-100

REV. NO.	DESCRIPTION OF REVISIONS	BY	DATE

DR.	CHK. Somboj.	METROPOLITAN ELECTRICITY AUTHORITY	SCALE 1:75
DIV. CHIEF		CONCRETE SPACER BLOCK (FOR Ø 140 MM. HDPE CONDUIT)	SUPERSEDING
EXC. MGR.			SH. NO. 3 OF 3
DTY. GEN. MGR.			DWG NO. UG-8-002
DATE	, 2530		

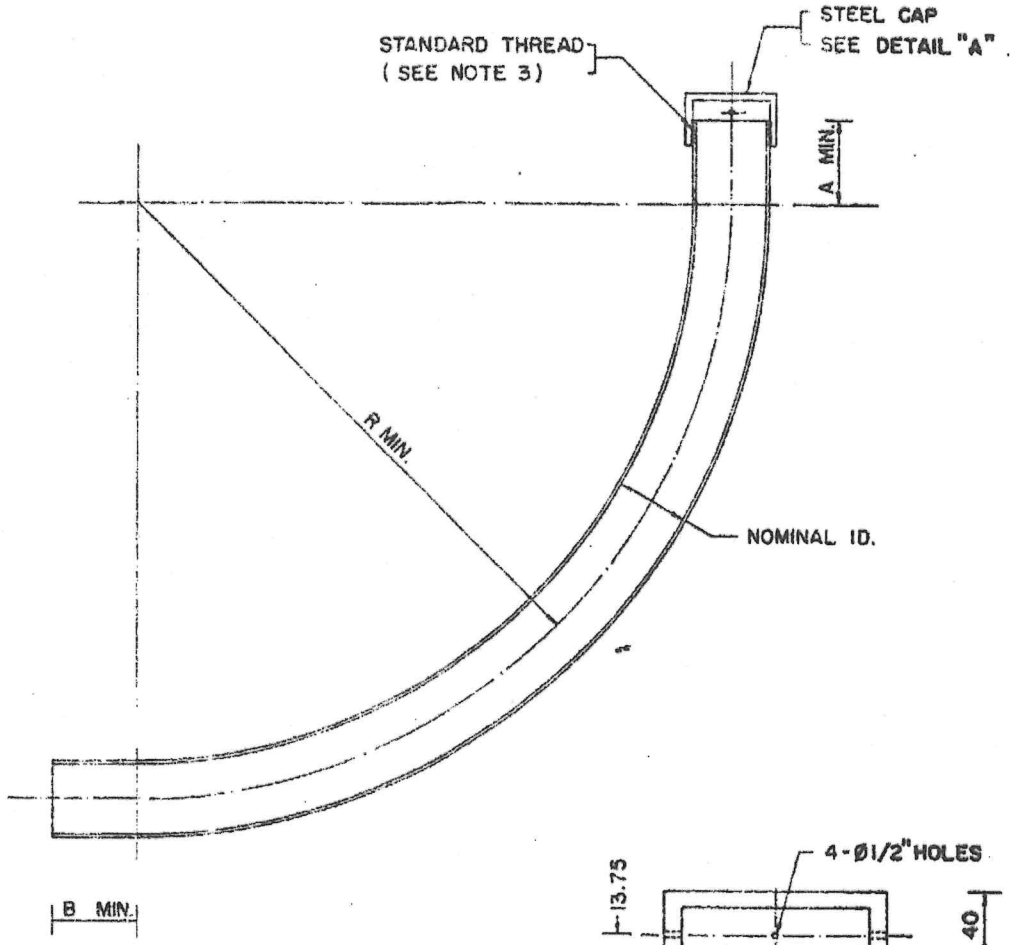

90° ELBOW, GALV. STEEL CONDUIT

(WITH GALV. STEEL CAP)

CODE NO.	NOMINAL ID.		R	A	B
	MM.	IN.	MM.		
562-400	100	4	1270	150	150
562-500	127	5	1595	300	300
562-600	150	6	1965	300	300

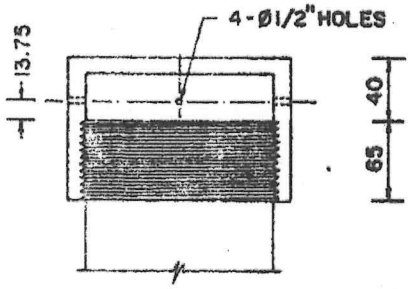

DETAIL "A"
GALV. STEEL CAP

NOTES:
1. DIMENSIONS ARE IN MM.
2. THIS TYPE OF 90° ELBOW IS APPLIED FOR 12/24 KV. CABLE RISER CONSTRUCTION.
3. STANDARD THREAD IS REFERRED TO TIS. 281-2521

REV. NO.	DESCRIPTION OF REVISIONS	BY	DATE

DR. Apichart	CHK. Somkiat	METROPOLITAN ELECTRICITY AUTHORITY	SCALE 1:12.5
DIV. CHIEF Suchart B.		90° ELBOW	SUPERSEDING 2410
EXC. MGR. T.H.			SH. NO. 1 OF 3
DTY. GEN. MGR. Bangon		(GALVANIZED STEEL CONDUIT)	DWG. NO. UG-8-004
DATE 14/5/2530			

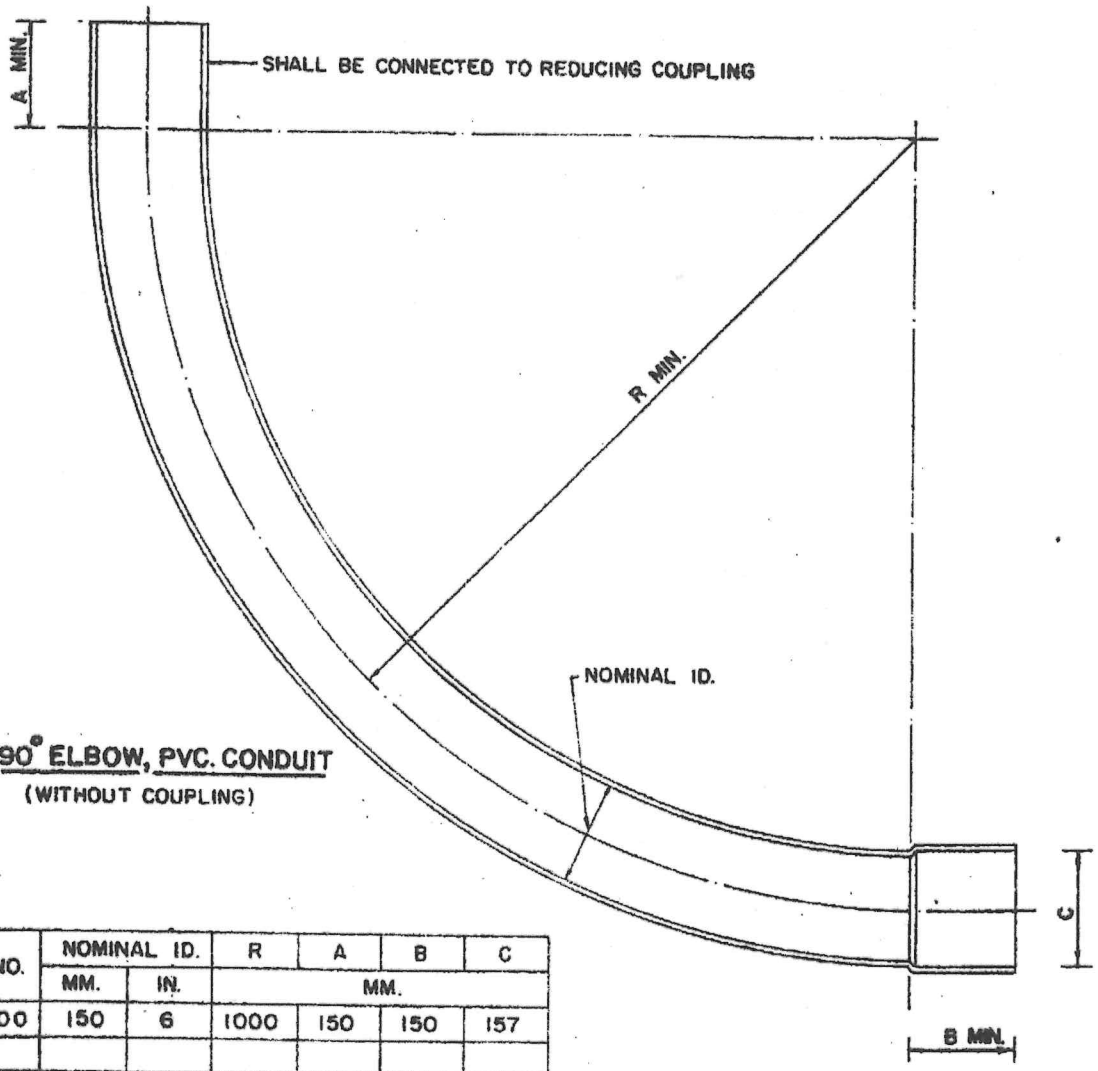

90° ELBOW, PVC. CONDUIT
(WITHOUT COUPLING)

CODE NO.	NOMINAL ID.		R	A	B	C
	MM.	IN.	MM.			
503-600	150	6	1000	150	150	157

NOTE.

THIS TYPE OF 90° ELBOW IS APPLIED FOR 69 KV. CABLE RISER CONSTRUCTION.

REV. NO.	DESCRIPTION OF REVISIONS	BY	DATE

DR. Apichart	CHK. Somkuan	METROPOLITAN ELECTRICITY AUTHORITY
DIV. CHIEF Suchart B.	90° ELBOW (PVC. CONDUIT)	SCALE 1:10
EXC. MGR. T.H.		SUPERSEDING 2410
DTY. GEN. MGR. Bongrisch		SH. NO. 2 OF 3
DATE 14/5/2530		DWG. NO. UG-8-004

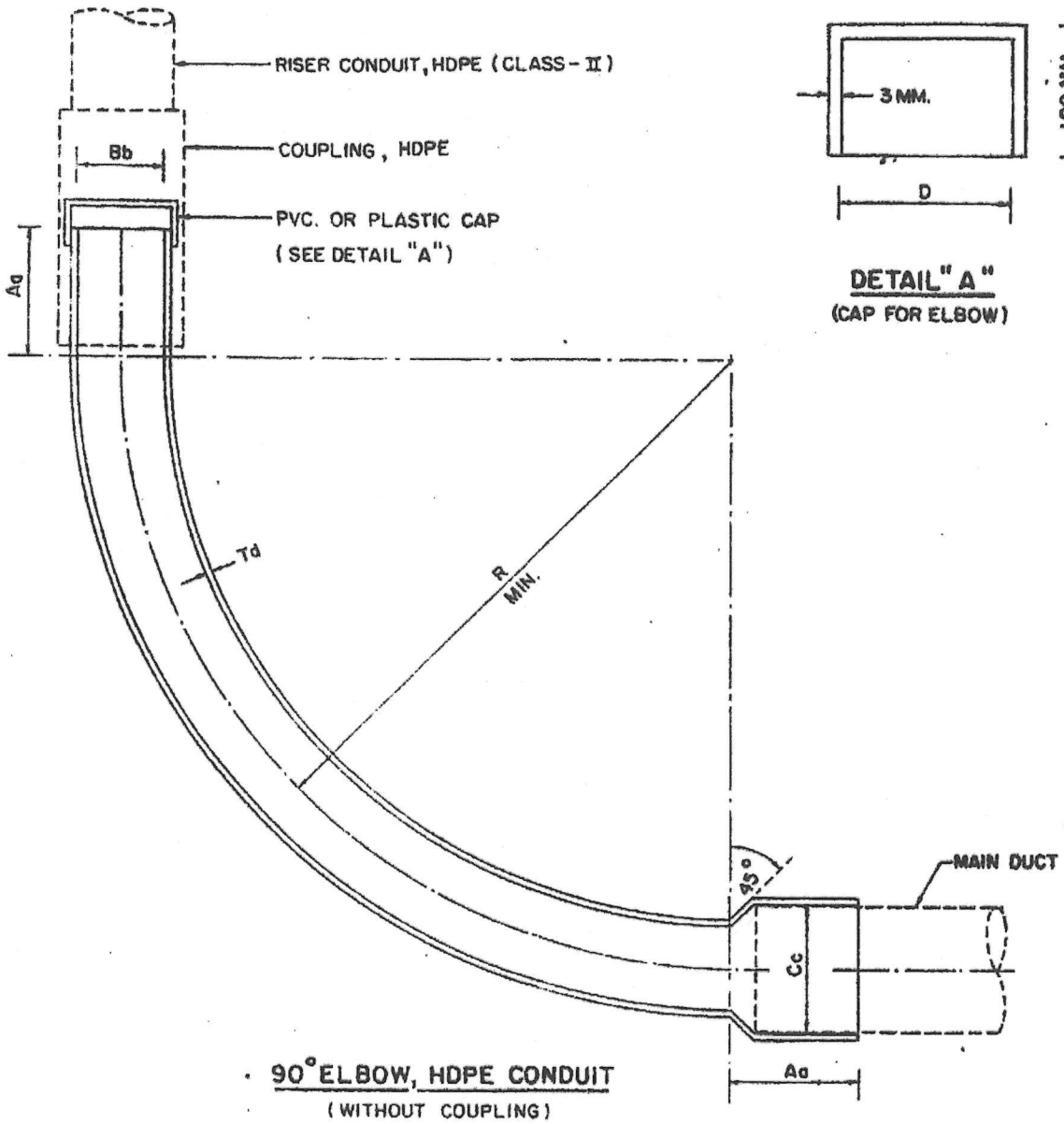

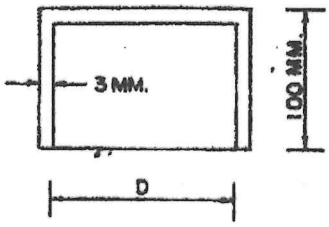

DETAIL "A"
(CAP FOR ELBOW)

90° ELBOW, HDPE CONDUIT
(WITHOUT COUPLING)

MAIN DUCT		90° ELBOW, HDPE			DIMENSION (MM.)					
SIZE (MM.)	TYPE	NOM. DIA. (MM.)	CODE NO.	TYPE	A	B	C	D	R	T
115 ID.	ASBESTOS	125	493-115	A	200	115.4	128.5	126	1000	4.8
140 ID.		140	493-140	B	200	129.2	155.5	141	1000	5.4
140 ID.		160	493-160	E	250	147.6	155.5	161	1840	6.2
125 OD.	HDPE	125	494-125	C	200	115.4	126	126	1000	4.8
140 OD.		140	494-140	D	200	129.2	141	141	1000	5.4
160 OD.		160	494-160	F	250	147.6	161	161	1840	6.2

NOTE. ALLOWABLE VARIATIONS: a = ± 5.0 MM. b = ± 1.0 MM. c = ± 1.0 MM. d = ± 0.5 MM.

REV. NO.	DESCRIPTION OF REVISIONS	BY	DATE
3	ADDED CAP FOR ELBOW AND ADDED ELBOW TYPE E & F.	Sombat.	18/2/30
2	ADDED CODE NO. OF 90° ELBOW	Sombat.	7/10/29
1	CHANGED DWG. NO. FROM 10A4-0195 TO BE UG-8-004 AND ADDED VARIATIONS.	Sombat.	6/2/29

DR	CHK. Sombat.	METROPOLITAN ELECTRICITY AUTHORITY	SCALE NONE
DIV. CHIEF	Suchart	90° ELBOW (HDPE CONDUIT)	SUPERSEDING
EXC. MGR.	Tongtaj		SH. NO. 3 OF 3
DTY. GEN. MGR.			DWG NO. UG-8-004
DATE	15/10/2528		

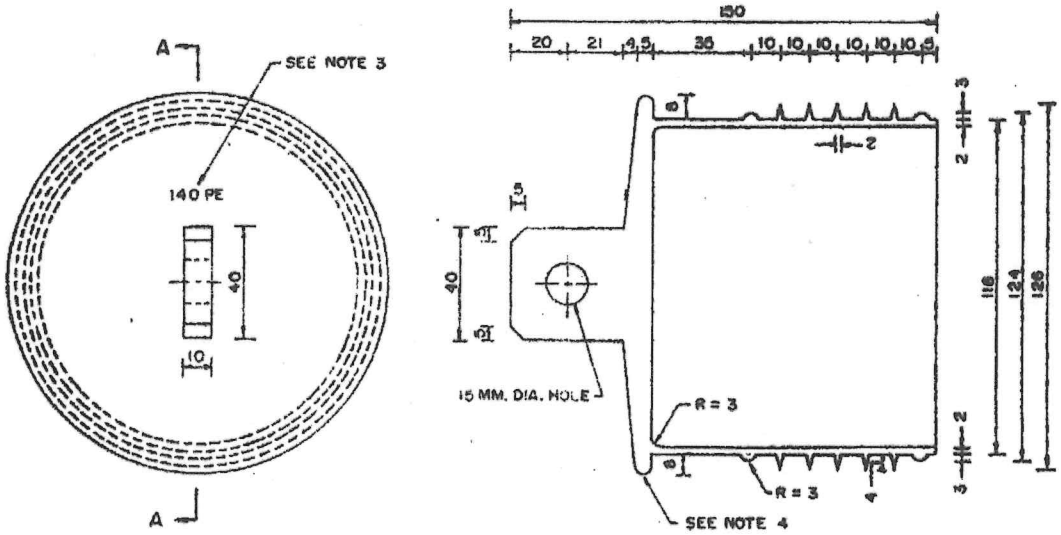

SECTION "A-A"

PLASTIC PLUG

NOTES.

1. DIMENSIONS ARE IN MM.
2. MATERIAL : LOW DENSITY POLYETHYLENE.
3. MARKING SHOWS HDPE CONDUIT SIZE WITH WHICH THIS PLUG WILL BE APPLIED. THE FIGURES AND LETTER ARE 1 MM. STANDING OUT OF THE SURFACE.
4. SQUARE OR ROUND EDGE IS ACCEPTABLE.

REV. NO.	DESCRIPTION OF REVISIONS	BY	DATE

DR.	CHK. Sombat	METROPOLITAN ELECTRICITY AUTHORITY	SCALE 1:2.5
DIV. CHIEF Suchart B.		PLASTIC PLUG FOR Ø 140 MM. HDPE CONDUIT CLASS-1	SUPERSEDING
EXC. MGR. T.H.			SH. NO. 3 OF 3
DTY. GEN. MGR.			DWG NO. UG-8-005
DATE 14/5/2530			

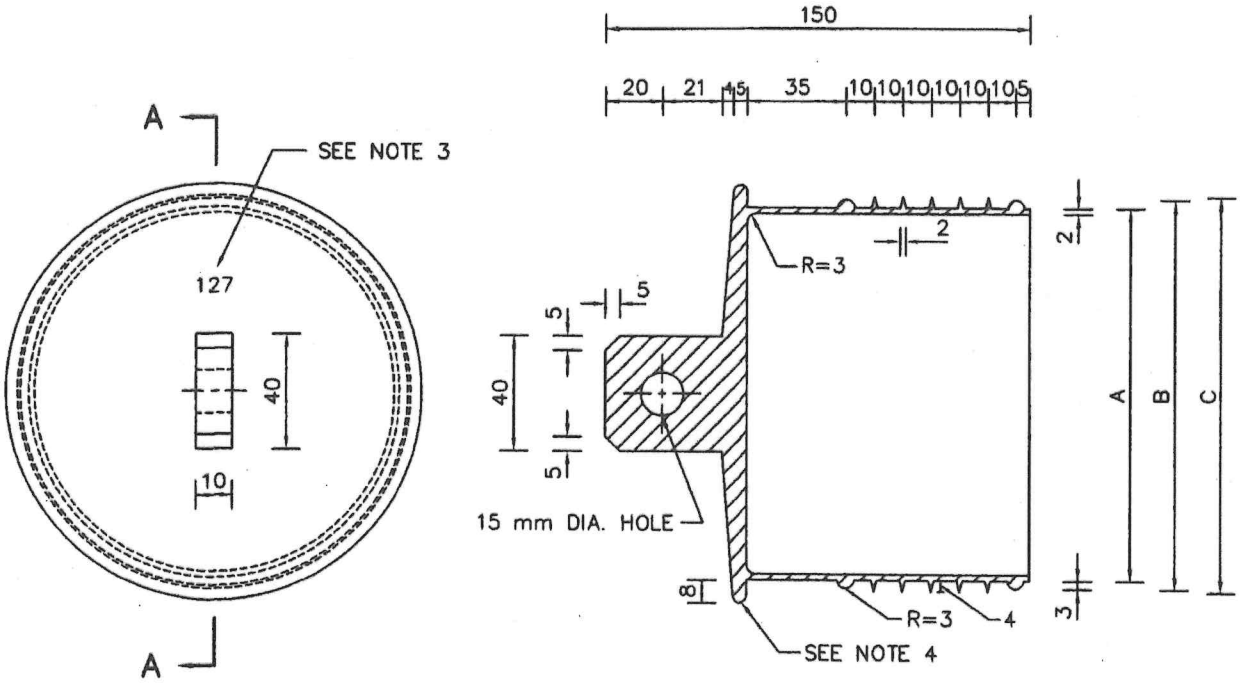

SECTION "A–A"

PLASTIC PLUG FOR RTRC CONDUIT

SIZE ID A INCH(mm)	A	B	C
4 (101.6)	95	101	103
5 (127)	120	126	128
6 (152.40)	146	152	154

NOTES

1. DIMENSIONS ARE IN mm.
2. MATERIAL : BLACK POLYETHYLENE
3. MARKING SHOWS RTRC CONDUIT SIZE WHICH THIS PLUG WILL BE APPLIED. THE FIGURES AND LETTERS ARE 1 mm. STANDING OUT OF THE SURFACE
4. SQUARE OR ROUND EDGE IS ACCEPTABLE.
5. REFERENCE CONDUIT FOR RTRC : ท่ออีพ็อกซีเรซินเสริมใยแก้วสำหรับใช้ร้อยสายไฟฟ้า และสายโทรศัพท์ ชนิด BG ชั้นคุณภาพที่ 1 ตาม มอก. 2518–2556 หรือฉบับล่าสุด

REV.NO.	DESCRIPTION OF REVISIONS	BY	DATE

DR. Jintasil	ENGR. Jintasil	METROPOLITAN ELECTRICITY AUTHORITY	SCALE NONE
CHF.SEC. Monthol (acting)		ACCESSORIES FOR RTRC CONDUIT (PLASTIC PLUG)	SUPERSEDING 10A4–0404
CHK.			SH.NO. 1 OF 2
DIR.DIV. Pongsan			DWG. NO. 10A4–0734
DATE 22/5/2556			

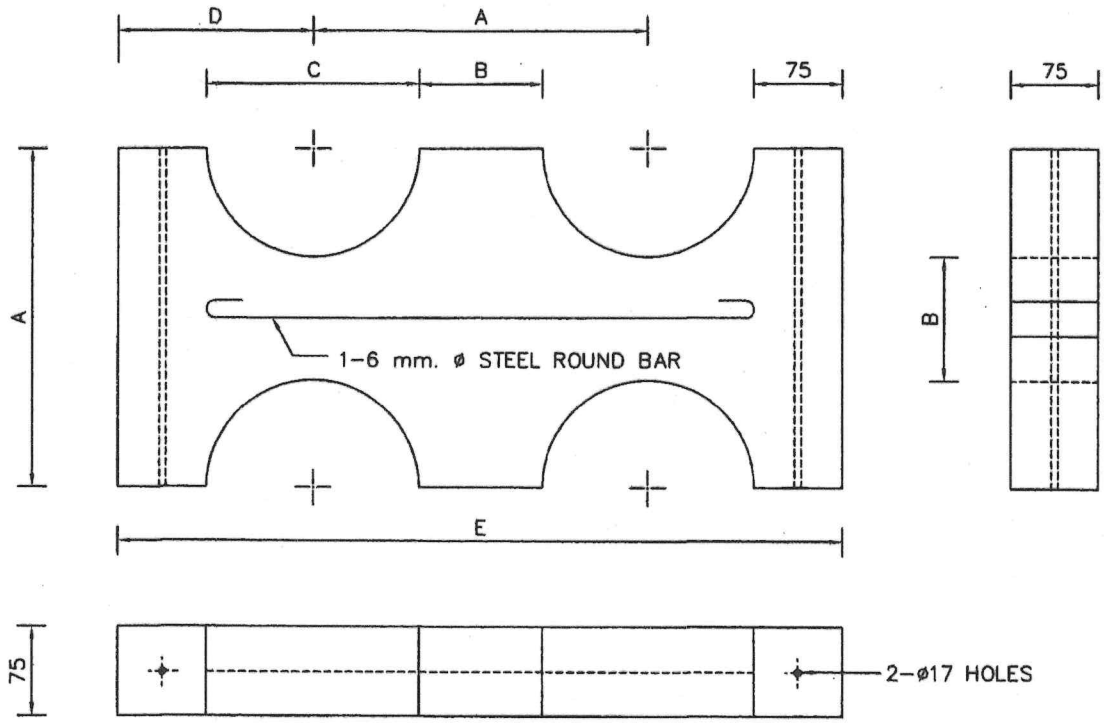

TYPICAL CONCRETE SPACER BLOCK FOR RTRC CONDUIT

(2 DUCT)

SPACER BLOCK TABLE

DIA. OF DUCT (mm)	A	B	C	D	E
100	190	78	112	131	452
125	250	112	138	144	538
150	250	86	164	157	564

NOTE DIMENSIONS ARE IN mm UNLESS OTHERWISE SPECIFIED

REV.NO.	DESCRIPTION OF REVISIONS	BY	DATE

DR. Jintasit	ENGR. Jintasit	METROPOLITAN ELECTRICITY AUTHORITY	SCALE NONE
CHF.SEC. Monthol (acting)		ACCESSORIES FOR RTRC CONDUIT (CONCRETE SPACER BLOCK)	SUPERSEDING 10A4-0404
CHK. –			SH.NO. 2 OF 2
DIR.DIV. Pongsan			DWG. NO. 10A4-0734
DATE 22/5/2556			

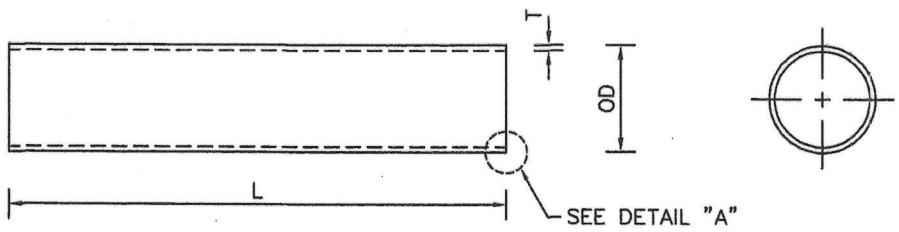

HIGH DENSITY POLYETHYLENE CONDUIT

SIZE DESIGNATION (mm)	AVERAGE OD (mm)		L (mm)	HDPE CONDUIT CLASS–I			HDPE CONDUIT CLASS–II		
				T (mm)		MASS 2) (kg/m)	T (mm)		MASS 2) (kg/m)
	MIN.	MAX.		MIN.	MAX.		MIN.	MAX.	
50	50.0	50.4	6000^{+60}_{0}	3.0	3.4	0.453	2.0	2.3	0.314
63	63.0	63.4	6000^{+60}_{0}	3.8	4.3	0.721	2.5	2.9	0.494
75	75.0	75.5	6000^{+60}_{0}	4.5	5.1	1.02	2.9	3.3	0.675
90	90.0	90.6	6000^{+60}_{0}	5.4	6.1	1.46	3.5	4.0	0.978
110	110.0	110.7	6000^{+60}_{0}	6.6	7.4	2.17	4.2	4.8	1.43
125	125.0	125.8	6000^{+60}_{0}	7.4	8.3	2.76	4.8	5.4	1.84
140	140.0	140.9	6000^{+60}_{0}	8.3	9.3	3.46	5.4	6.1	2.32
160	160.0	161.0	6000^{+60}_{0}	9.5	10.6	4.52	6.2	7.0	3.04

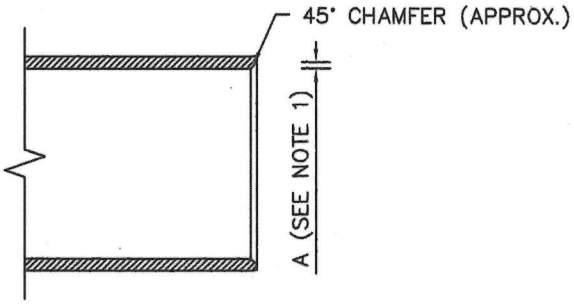

DETAIL "A"

NOTES

1. DIMENSION A IS EQUAL to T/2 APPROXIMATELY.
2. THE MASS HAS BEEN CALCULATED TAKING THE AVERAGE DENSITY AS 0.95 g/cm³.

APPLICATIONS

1. HDPE CONDUIT CLASS–I SHALL BE USED TO BE MAIN DUCT.
2. HDPE CONDUIT CLASS–II SHALL BE USED TO BE 90° ELBOW AND CONDUIT INSTALLED ABOVE GROUND.

REV. NO.	DESCRIPTION OF REVISIONS	BY	DATE
2	REVISED DIMENSIONS OF HDPE CONDUIT AND NOTE		28/10/65
1	REVISED DIMENSIONS OF HDPE CONDUIT AND NOTE	Monthol	11/5/58

DR.	CHK.	METROPOLITAN ELECTRICITY AUTHORITY
DIV. CHIEF		HIGH DENSITY POLYETHYLENE CONDUIT (HDPE CONDUIT)
EXC. MGR.		
DTY. GEN. MGR.		
DATE	.2530	

SCALE NONE
SUPERSEDING
SH. NO. 1 OF 2
DWG NO. UG-8-008

HIGH DENSITY POLYETHYLENE CONDUIT

SIZE DESIGNATION (mm)	HDPE CONDUIT CLASS–I CODE NO.	HDPE CONDUIT CLASS–II CODE NO.
50	4730–490–05000	4730–490–05010
63	4730–490–06300	4730–490–06310
75	4730–490–07500	4730–490–07510
90	4730–490–09000	4730–490–09010
110	4730–490–11000	4730–490–11010
125	4730–490–12500	4730–490–12510
140	4730–490–14000	4730–490–14010
160	4730–490–16000	4730–490–16010

REV.NO.	DESCRIPTION OF REVISIONS	BY	DATE
1	REVISED CODE NO. AND CHANGED FROM 6 TO 12 DIGITS.	Wlawat	22/3/36

DR. Chauhan	CHK. Wlawat	METROPOLITAN ELECTRICITY AUTHORITY	SCALE NONE
DIR.DIV.		HIGH DENSITY POLYETHYLENE CONDUIT (HDPE CONDUIT)	SUPERSEDING
DIR.DEPT.			SH.NO. 2 OF 2
DEP.DIV.			DWG. NO. UG–8–008
DATE			

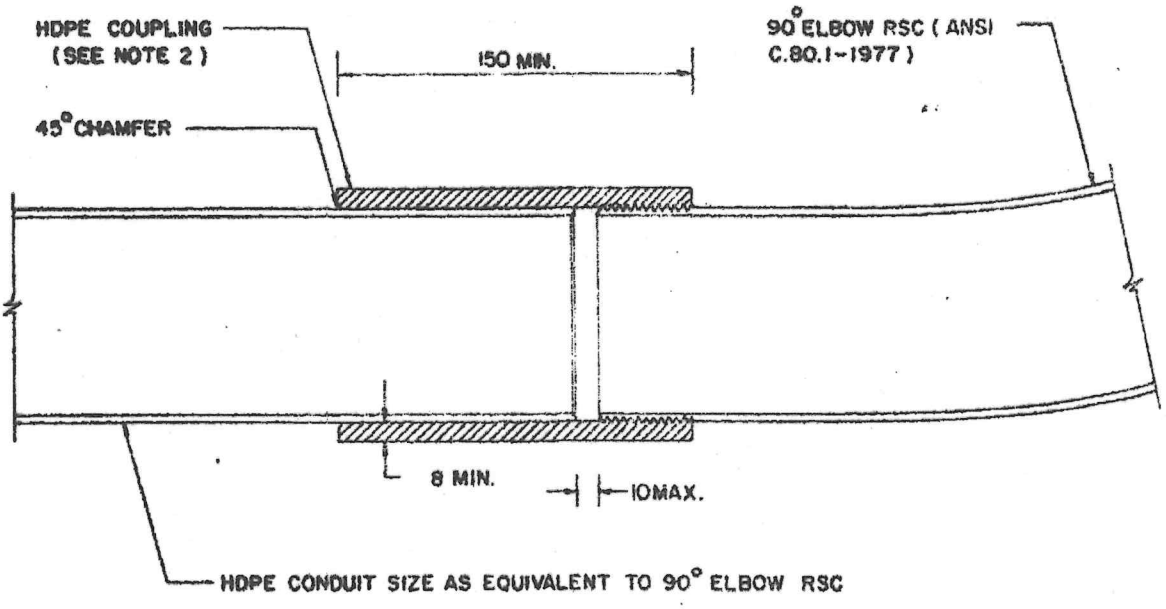

FIG. 1 HDPE COUPLING (HDPE-RSC)

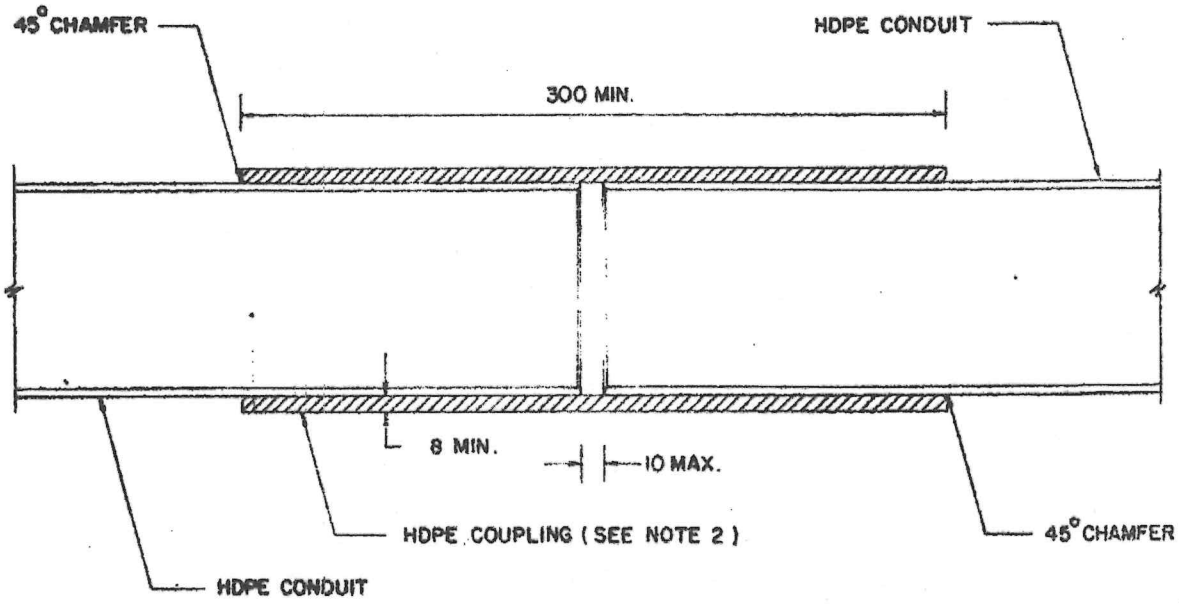

FIG. 2 HDPE COUPLING (HDPE-HDPE)

NOTES.

1. DIMENSIONS ARE IN MM.
2. HDPE COUPLING SHALL BE MADE TO SUIT THE PURPOSE OF CONNECTION BETWEEN THE SPECIFIED CONDUITS.
3. SEE DWG. NO. UG-8-008 FOR DETAILS OF HDPE CONDUIT.

REV. NO.	DESCRIPTION OF REVISIONS	BY	DATE

DR. Apichart	CHK. Sombat	METROPOLITAN ELECTRICITY AUTHORITY	SCALE 1:3
DIV. CHIEF		HDPE COUPLING (HDPE-RSC AND HDPE-HDPE)	SUPERSEDING
EXC. MGR.			SH. NO. 1 OF 1
DTY. GEN. MGR.			DWG NO. UG-8-010
DATE	2530		

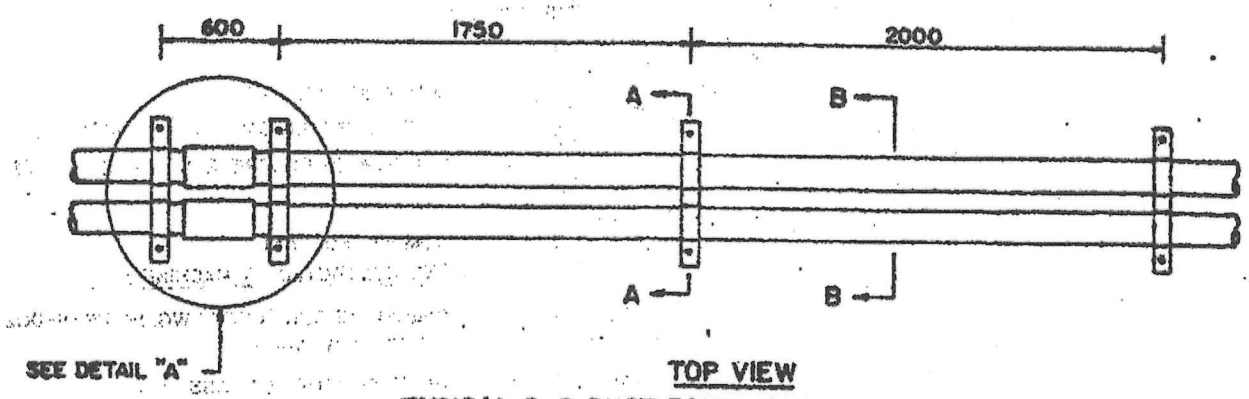

TOP VIEW

TYPICAL 2x2 DUCT BANK, Ø 140 MM. HDPE CONDUIT

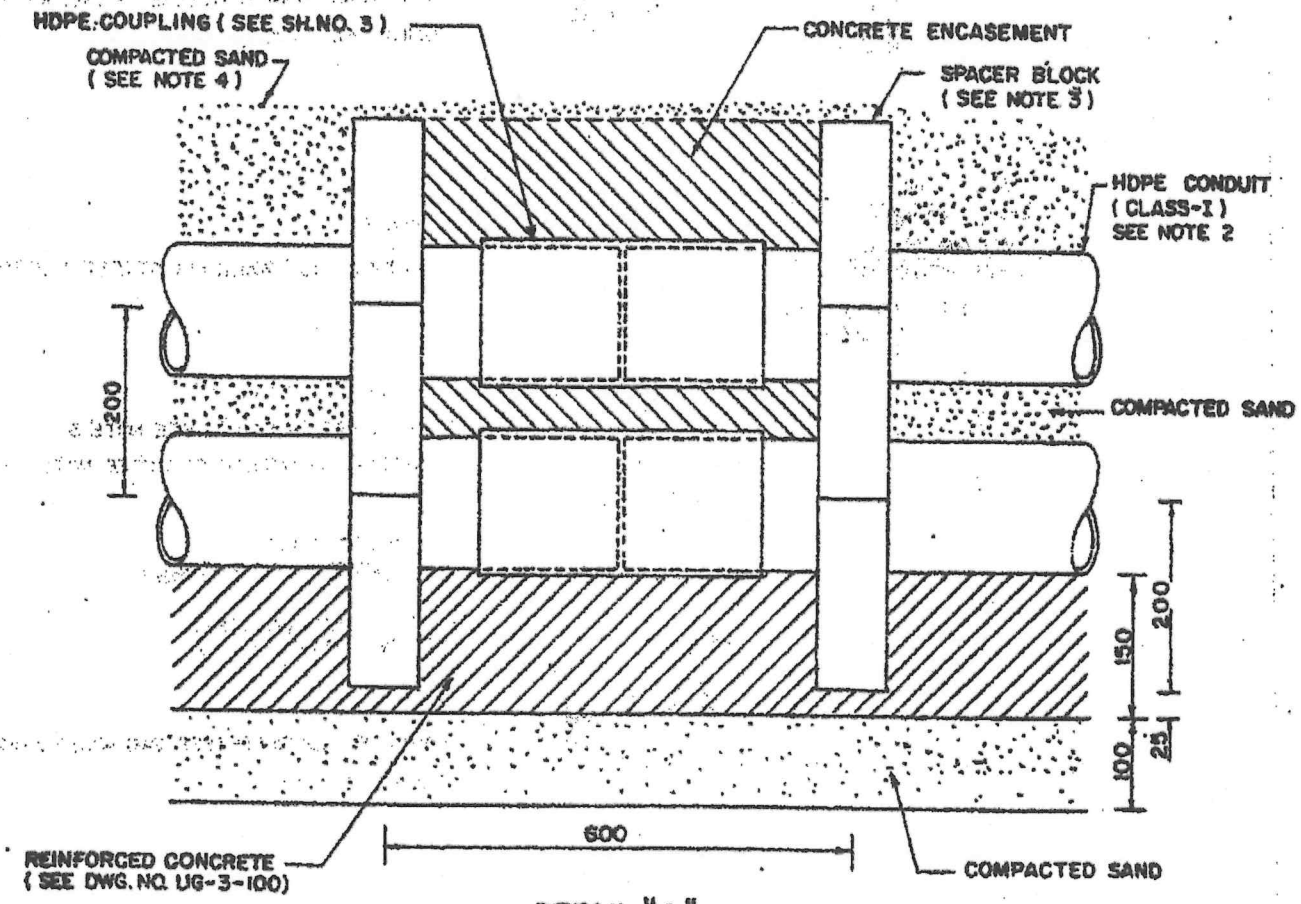

DETAIL "A"

(FRONT VIEW-SCALE 1:7.5)

NOTES 1. DIMENSIONS ARE IN MM.

2. FOR DETAILS OF HDPE CONDUIT, SEE DWG. NO. UG-8-008.

3. SEE DETAILS ON DWG. NO. UG-8-002 (SH. NO. 3) & UG-3-100.

4. NO COMPACTED BY MACHINE..

REV. NO.	DESCRIPTION OF REVISIONS	BY	DATE

DR.	CHK.	METROPOLITAN ELECTRICITY AUTHORITY	SCALE 1:30
DIV. CHIEF		UG. PRIMARY & SUBTRANSMISSION CONSTRUCTION HDPE DUCT BANK	SUPERSEDING
EXC. MGR.			SH. NO. 1 OF 3
DTY. GEN. MGR.			DWG NO. UG-6-100
DATE	2530		

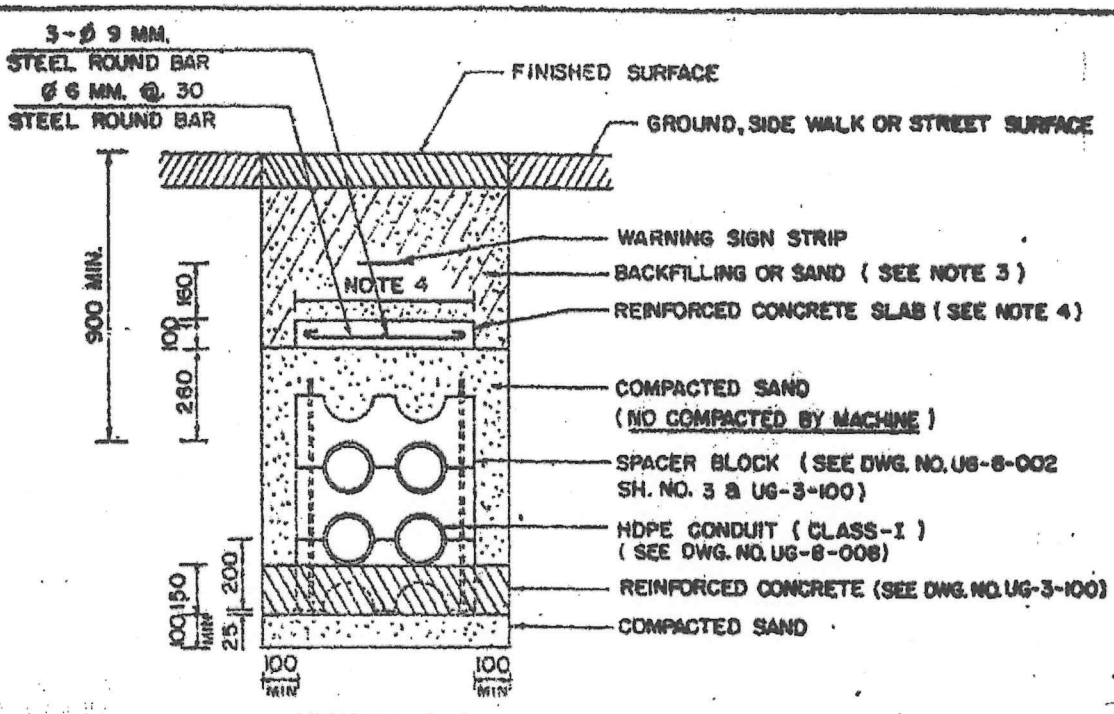

SECTION A-A

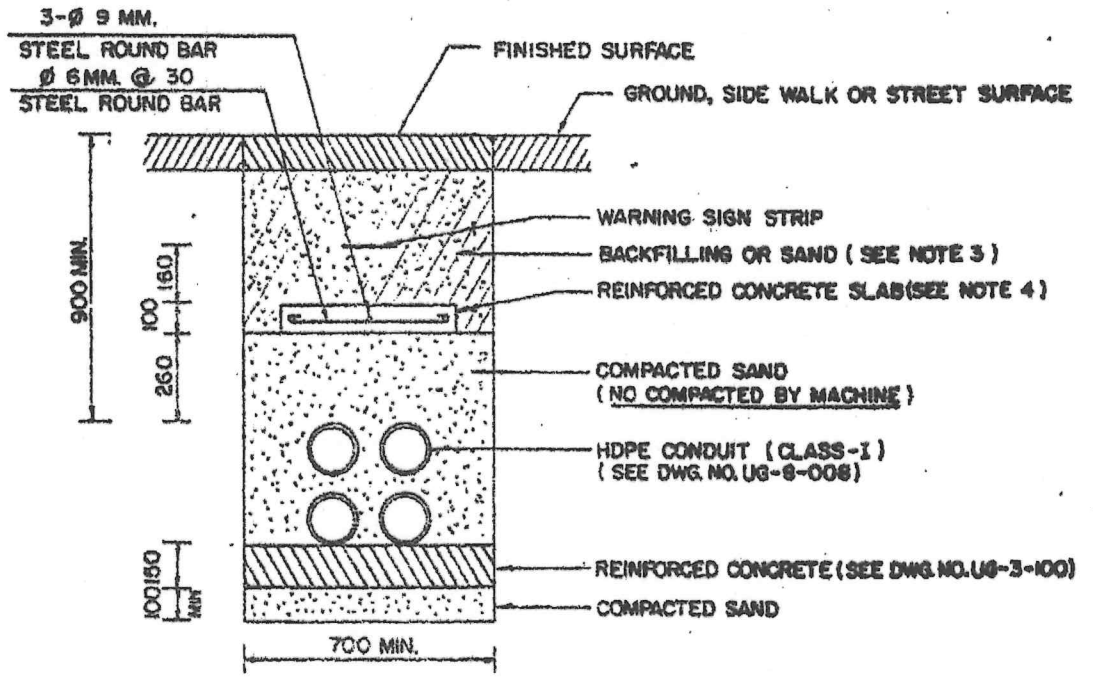

SECTION B-B

NOTES.

1. DIMENSIONS ARE IN MM.
2. FOR CIRCUIT SEQUENCE AND NO. OF UG. CABLE IN HDPE CONDUIT, SEE DWG. NO. UG-4-002 & UG-4-003.
3. BACKFILLING (OR SAND) IS COMPACTED ACCORDING TO REQUIREMENTS SET BY THE SIDE WALK OR STREET STRUCTURE.
4. THE WIDTH OF CONCRETE SLAB IS THE SAME AS OF SPACER BLOCK.

REV. NO.	DESCRIPTION OF REVISIONS	BY	DATE

DR.	CHK.	METROPOLITAN ELECTRICITY AUTHORITY	SCALE 1:20
DIV. CHIEF		UG. PRIMARY & SUBTRANSMISSION CONSTRUCTION HDPE DUCT BANK	SUPERSEDING
EXC. MGR.			SH. NO. 2 OF 3
DTY. GEN. MGR.			DWG NO. UG-6-100
DATE	2530		

METHOD OF HDPE CONDUIT CONNECTION

1. MARKING

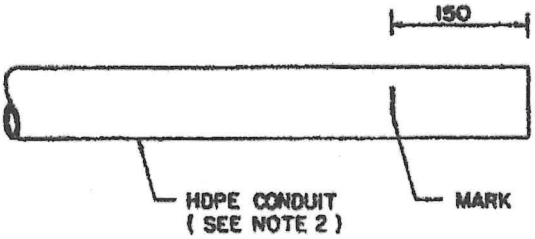

– MARK END OF CONDUIT TO BE CONNECTED.

2. CLEANING

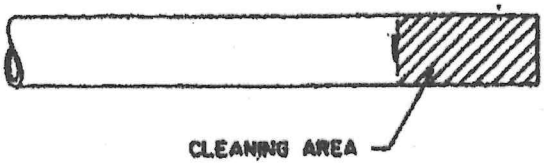

– USING DAMP CLOTH TO CLEAN OUTSIDE CONDUIT AND INSIDE OF COUPLING.

3. APPLY ADHESIVE (SEE NOTE 3)

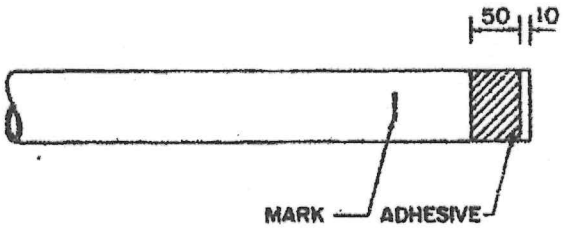

– APPLIED RUBBER ADHESIVE BY BRUSH AS SHOWN IN THE FIGURE.

4. CONNECTION

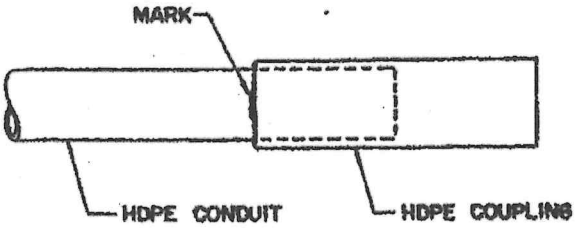

– SLIDE A CONDUIT IN TO A COUPLING.

5. COMPLETED CONNECTION

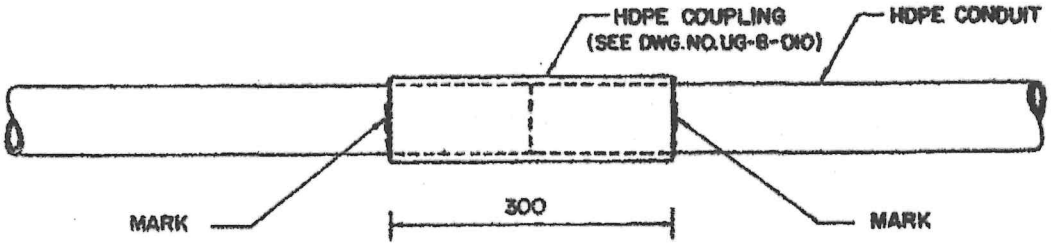

–REPEAT STEP 1 TO 3 FOR THE OTHER CONDUIT AND SLIDE A CONDUIT INTO A COUPLING UNTIL THE BOTH END OF CONDUITS ARE BUTTED.

NOTES.
1. DIMENSIONS ARE IN MM.
2. THE METHOD SHOWN ABOVE CAN BE USED FOR BOTH CLASS-I AND CLASS-II HDPE CONDUIT (SEE DETAILS OF HDPE CONDUIT ON DWG. NO. UG-8-008)
3. THE PURPOSE OF APPLYING RUBBER ADHESIVE (RUBBER CEMENT) IS TO PROTECT LEAKING OF WATER INTO CONDUIT COUPLING.

REV. NO.	DESCRIPTION OF REVISIONS	BY	DATE

DR.	CHK.	METROPOLITAN ELECTRICITY AUTHORITY	SCALE NONE
DIV. CHIEF		UG. PRIMARY & SUBTRANSMISSION CONSTRUCTION HDPE DUCT BANK	SUPERSEDING
EXC. MGR.			SH. NO. 3 OF 3
DTY. GEN. MGR.			DWG NO. UG-6-100
DATE	2530		

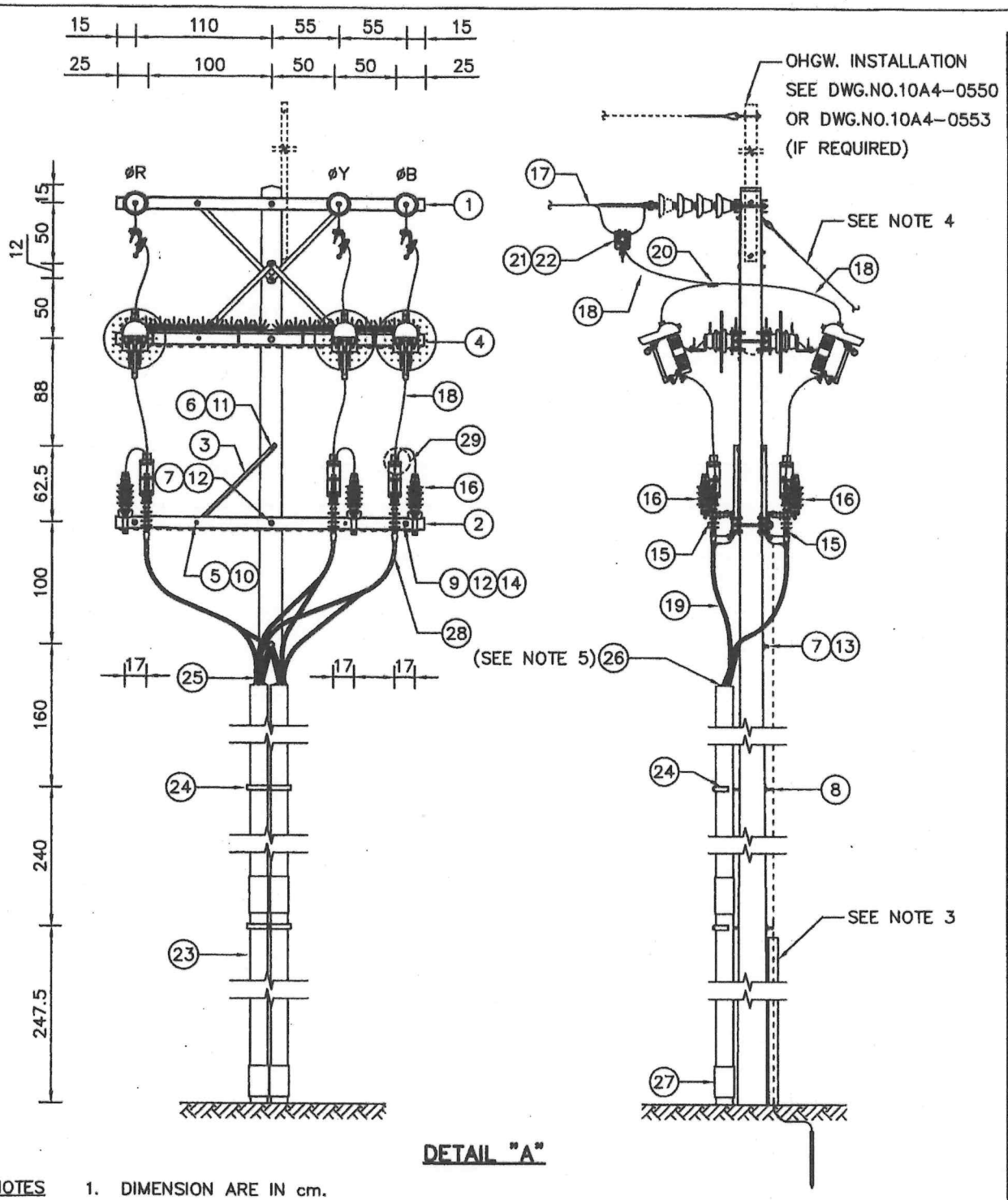

DETAIL "A"

NOTES

1. DIMENSION ARE IN cm.
2. FOR SPARE CIRCUIT, THE FUSES AND FUSE HOLDERS SHALL NOT BE INSTALLED.
3. SEE GROUNDING DIAGRAM IN DWG. NO.1702 SH.NO.1 FIG. D.
4. FOR UNGUYED-POLE INSTALLATION, SPACED AERIAL CABLE 70 mm² SHELL BE STRUNG WITH STRINGING TENSION 210 N IN MAXIMUM SLACK SPAN 10 m (1 N = 0.2248 lb = 0.102 kg).
5. STUFF CONDUIT ENTRANCE WITH CORK TAPE.

REV. NO.	DESCRIPTION OF REVISIONS	BY	DATE
1	REVISED DRAWING, NOTES, AND SCALE	Monthol	7/10/59

DR.	CHK.	METROPOLITAN ELECTRICITY AUTHORITY	SCALE NONE
DIV. CHIEF		12 OR 24 KV. CABLE RISER LINE ARM DEADEND CONSTRUCTION (DOUBLE CIRCUIT)	SUPERSEDING
EXC. MGR.			SH. NO. 1 OF 2
DTY. GEN. MGR.			DWG NO. 1409
DATE	21/11/2529		

BILL OF MATERIAL			
ITEM NO.	CODE NO.	REQ'D	DESCRIPTION
1	–	1	DOUBLE CROSSARM SINGLE DEADEND ASSEMBLY (DWG. NO.318 SH. NO.2 FIG.B)
2	5625–662–25200	2	CROSSARM, STEEL CHANNEL 100 x 50 x 5 mm. x 2,5 m. LONG
3	5615–030–29100	2	BRACE CROSSARM STEEL ANGLE 40 x 40 x 4 mm. x 91.3 cm. LONG
4	–	2	DROP FUSE CUTOUT INSTALLATION (SEE DWG. NO.006)
5	5605–003–01400	2	BOLT, MACHINE 3/8" x 1–1/2"
6	5605–004–41000	1	BOLT, MACHINE 1/2" x 10"
7	5605–005–51000	2	BOLT, MACHINE 5/8" x 10"
8	5605–005–51600	2	BOLT, MACHINE 5/8" x 16"
9	5605–011–51200	2	BOLT, DOUBLE ARMING OVAL EYE, 5/8" x 12"
10	5605–025–30000	2	WASHER, ROUND FOR 3/8" BOLT
11	5605–025–40000	2	WASHER, ROUND FOR 1/2" BOLT
12	5605–025–50000	6	WASHER, ROUND FOR 5/8" BOLT
13	5605–027–52200	1	WASHER, SQUARE FLAT FOR 5/8" BOLT
14	5605–022–50000	2	NUT, SQUARE FOR 5/8" BOLT
15	6145–259–07200	6	TERMINATOR, FOR CU CABLE XLPE 12/20 kV 70 mm²
16	5920–475–20000	6	LIGHTNING ARRESTER, 9 kV 10 kA (FOR 12 kV SYSTEM) OR
	5920–474–09100		LIGHTNING ARRESTER, 21 kV 10 kA (FOR 24 kV SYSTEM)
17	6145–229–20400	AS REQ'D	SPACED AERIAL CABLE 70 mm²
18	6145–201–07000	AS REQ'D	CONDUCTOR, PVC INSULATED MEA TYPE A 70 mm²
19	6145–235–07100	AS REQ'D	CONDUCTOR, COPPER CABLE XLPE 12/20 kV 70 mm²
20	6145–063–62400	3	CONNECTOR, TAP COMPRESSION (C–FRAME) 70–95 mm² R&T
21	6145–073–14300	3	CLAMP, STIRRUP FOR 35–70 mm²
22	6145–068–16500	3	CLAMP, HOT–LINE FOR 16–70 mm²
23	4710–518–50000	4	CONDUIT, RIGID STEEL (RSC) ø125mm (5")
24	4710–518–51200	2	SUPPORT BRACKET FOR CONDUIT 5" (DOUBLE)
25	6145–253–03500	2	SUPPORT GRIP 3"–3.5"
26	5970–312–23000	AS REQ'D	CORK TAPE 2" x 30 ft
27	4730–497–14000	2	COUPLING, FOR HDPE ø140 mm–RSC ø 5" OR
28	5970–311–62100	AS REQ'D	PVC TAPE, WHITE 3/4" x 20 m
29	–	6	TERMINAL CONNECTION ASSEMBLY (DWG.NO.10A4–0664 SH.NO.4 FIG.E)
30	5970–311–66600	1	GROUND ASSEMBLY, (SEE DWG. NO.1702 SH. NO.1 FIG.D)

REV. NO.	DESCRIPTION OF REVISIONS	BY	DATE
2	REVISED BILL OF MATERIAL	Manthel	7/10/59
1	REVISED CODE NO. OF ITEM NO. 21	Sombat	15/12/30

DR. Apichart CHK. Sombat	METROPOLITAN ELECTRICITY AUTHORITY	SCALE
DIV. CHIEF Prachart B.	12 OR 24 KV. CABLE RISER LINE ARM DEADEND CONSTRUCTION (DOUBLE CIRCUIT)	SUPERSEDING
EXC. MGR. T.H.		SH. NO. 2 OF 2
DTY. GEN. MGR. Boonmee		DWG NO. 1409
DATE 21/11/2529		

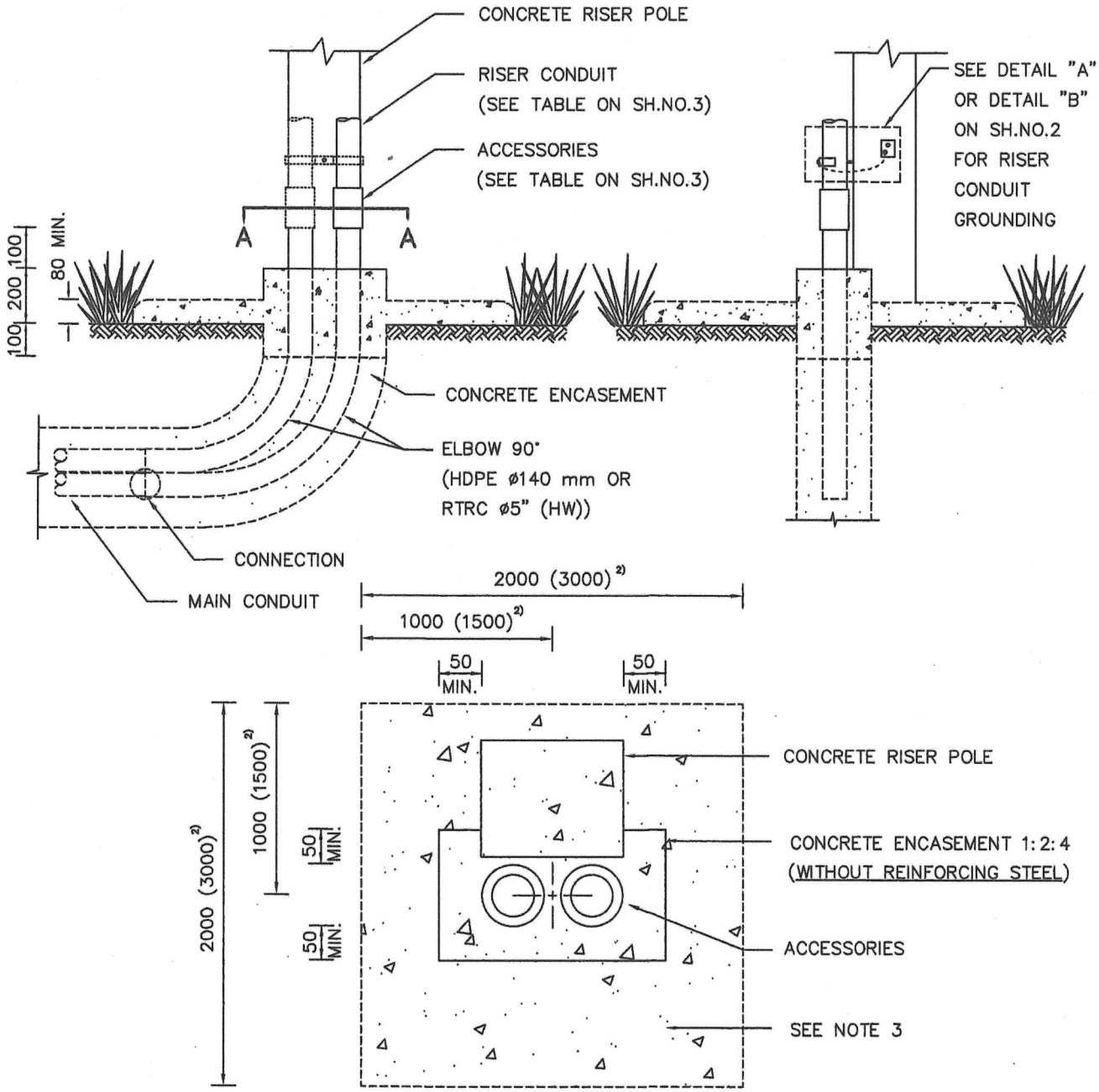

SECTION A–A

NOTE
1. DIMENSIONS ARE IN mm.
2. THE VALUE IN BRACKET ( ) IS FOR HDPE CONDUIT ONLY.
3. FOR THE CONSTRUCTION OF 12/24 kV RISER IN THE AREA WHERE BOTTOM OF RISER POLE CAN BE OVERGROWN WITH GRASS OR WEEDS, RISER CONDUIT SHALL BE COVERED BY CONCRETE 2x2 m TO PREVENT FIRE DAMAGE.

REV.NO.	DESCRIPTION OF REVISIONS	BY	DATE
1	REVISED DRAWING, TITLE, NUMBER OF SHEET & ADDED NOTE 2, 3	Monthol	13/4/63

DR. Chaochart / CHK. Sombat	METROPOLITAN ELECTRICITY AUTHORITY	SCALE NONE
DIR.DIV.	PRIMARY RISER POLE	SUPERSEDING
DIR.DEPT.	WITH CONCRETE ENCASEMENT	SH.NO. 1 OF 3
DEP.GOV.		DWG. NO. UG-7-103
DATE 8/11/2533		

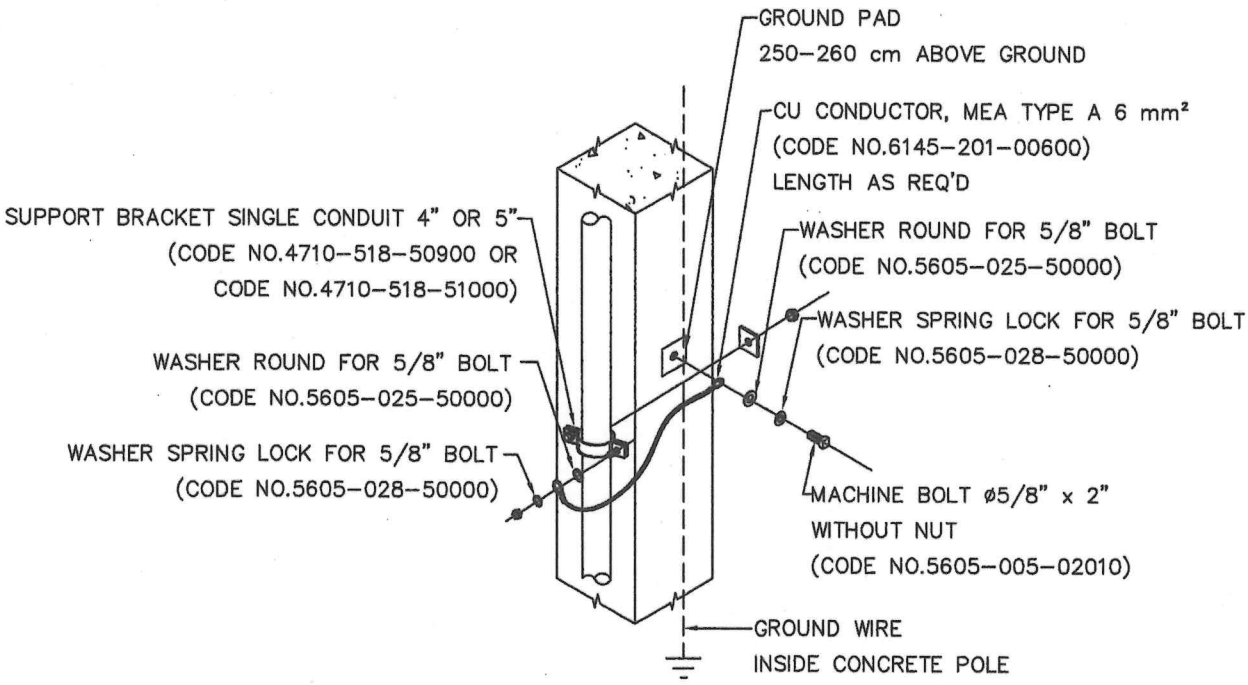

DETAIL "A"

(SINGLE CONDUIT)

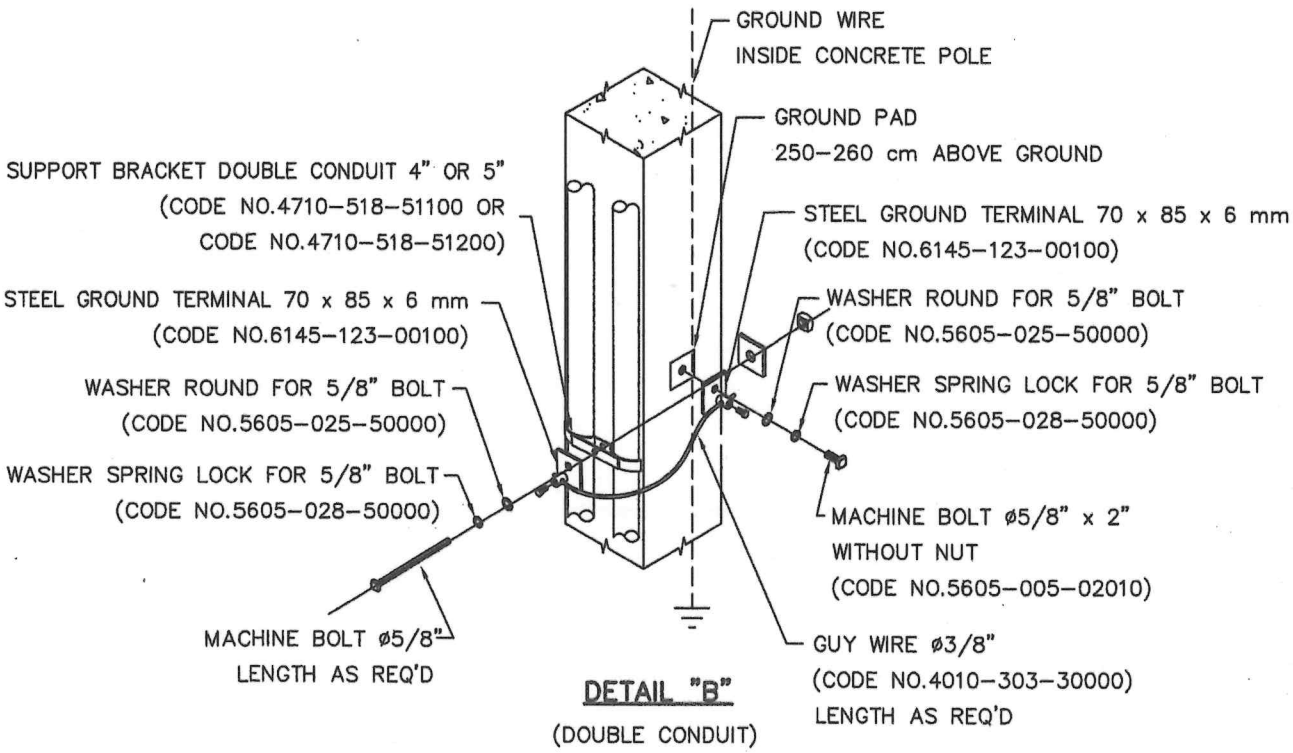

DETAIL "B"

(DOUBLE CONDUIT)

1	REVISED DRAWING, TITLE & NUMBER OF SHEET	Monthol	13/4/63
REV.NO.	DESCRIPTION OF REVISIONS	BY	DATE

DR. Chaochart CHK. Somkat	METROPOLITAN ELECTRICITY AUTHORITY	SCALE NONE
DIR.DIV.	PRIMARY RISER POLE	SUPERSEDING
DIR.DEPT.	WITH CONCRETE ENCASEMENT	SH.NO. 2 OF 3
DEP.GOV.		DWG. NO. UG–7–103
DATE 8/11/2533		

TABLE SELECTION OF RISER CONDUIT AND ACCESSORIES.

CABLE SIZE (mm^2)	RISER CONDUIT	ACCESSORIES
70	RIGID STEEL CONDUIT (RSC) ø4" (CODE NO.4710–518–40000)	REDUCING ADAPTER FOR HDPE CONDUIT ø140 mm – RSC ø4" (CODE NO.4730–563–41200)
240	RIGID STEEL CONDUIT (RSC) ø5" (CODE NO.4710–518–50000)	HDPE COUPLING ø140 mm – RSC ø5" (CODE NO.4730–497–14000)
400	RIGID STEEL CONDUIT (RSC) ø5" (CODE NO.4710–518–50000)	HDPE COUPLING ø140 mm – RSC ø5" (CODE NO.4730–563–42000)

NOTE SOMETIMES MAIN CONDUIT MAY BE LARGER FOR UG. CABLE 400 mm^2 INSTALLATION. THEREFORE BELOW 90° SHALL BE CHANGED TO ø160 mm HPDE AND CONNECTED TO RSC ø5" BY USING REDUCING ADAPTER FOR HDPE ø160 mm – RSC ø5" (CODE NO.4730–563–42000).

1	REVISED DRAWING, TITLE & NUMBER OF SHEET	Monthol	13/4/63
REV.NO.	DESCRIPTION OF REVISIONS	BY	DATE

DR. Chaochart CHK. Somkat	METROPOLITAN ELECTRICITY AUTHORITY	SCALE NONE
DIR.DIV.	PRIMARY RISER POLE	SUPERSEDING
DIR.DEPT.	WITH CONCRETE ENCASEMENT	SH.NO. 3 OF 3
DEP.GOV.		DWG. NO. UG–7–103
DATE 8/11/2533		

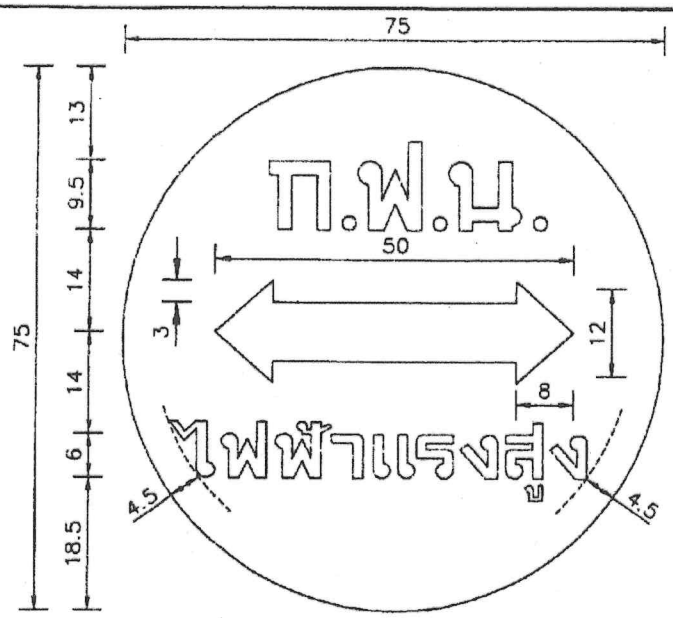

TOP VIEW

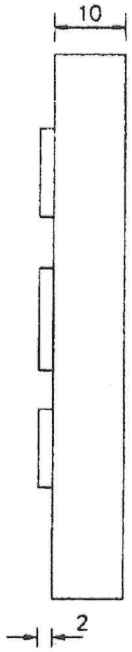

SIDE VIEW

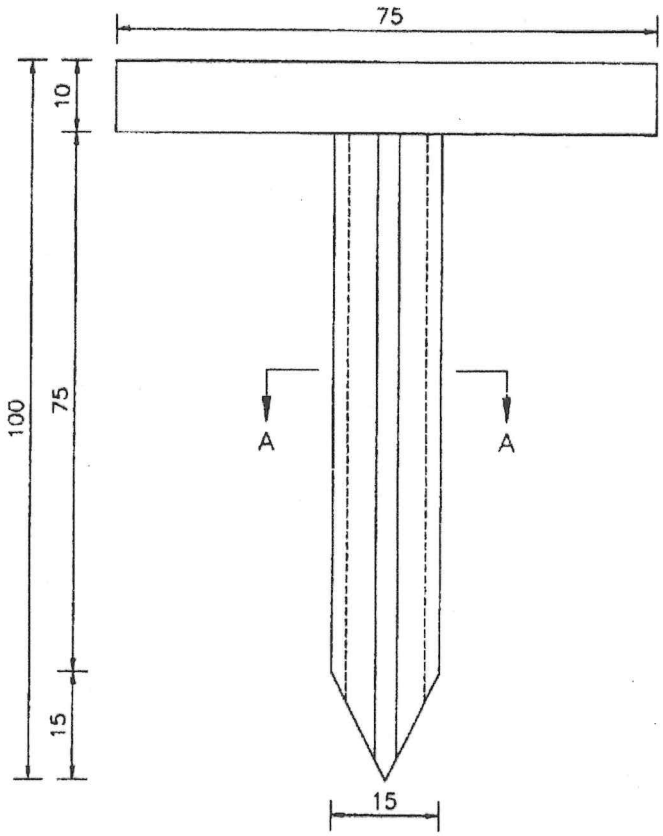

FRONT VIEW

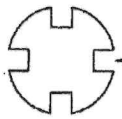

NOTCH THE MARKER THROUGHOUT THE LENGHT AT THE SIZE OF. 3 mm. x 3 mm.

SECTION A–A

TYPE A

CODE NO. 5620–636–40000

NOTES

1. DIMENSIONS ARE IN mm.
2. MATERIAL : MALLEABLE OR WROUGHT IRON, STEEL HOT–DIP GALVANIZED, MINIMUM AVERAGE OF ZINC–COATING SHALL NOT BE LESS THAN 120 MICRONS.

REV.NO.	DESCRIPTION OF REVISIONS	BY	DATE

DR. Poramej	CHK. Nitcha	METROPOLITAN ELECTRICITY AUTHORITY	SCALE 1:1
DIR.DIV.		CABLE ROUTE MARKER FLUSH MOUTED TYPE (TYPE A)	SUPERSEDING
DIR.DEPT.			SH.NO. 1 OF 2
DEP.GOV.			DWG. NO. 10A4–0445
DATE 5/7/2543			

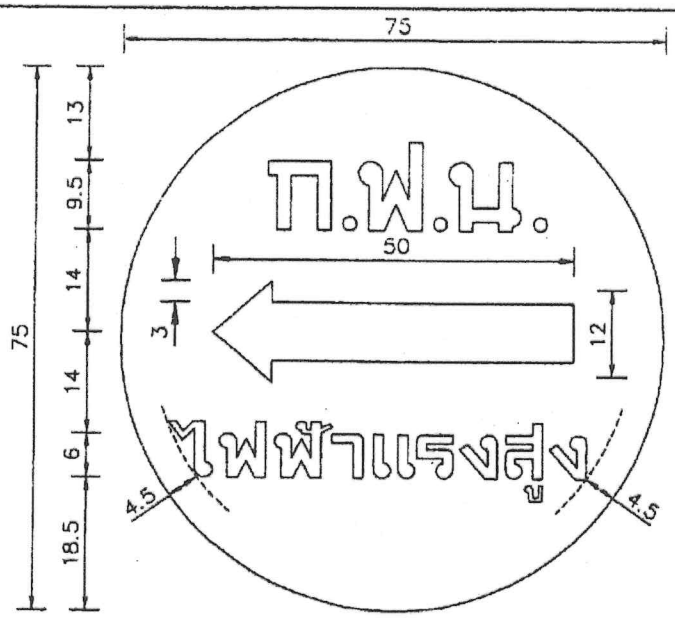

TOP VIEW

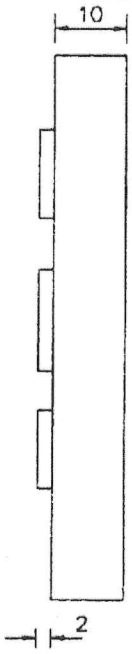

SIDE VIEW

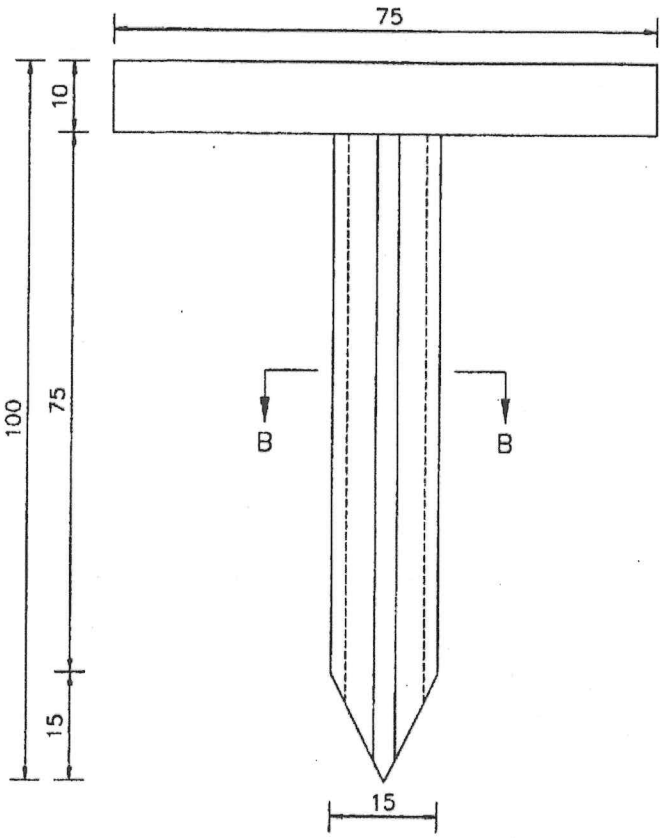

FRONT VIEW

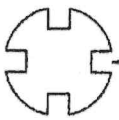

NOTCH THE MARKER THROUGHOUT THE LENGHT AT THE SIZE OF. 3 mm. x 3 mm.

SECTION B–B

TYPE B

CODE NO. 5620-636-40100

NOTES

1. DIMENSIONS ARE IN mm.
2. MATERIAL : MALLEABLE OR WROUGHT IRON, STEEL HOT-DIP GALVANIZED, MINIMUM AVERAGE OF ZINC-COATING SHALL NOT BE LESS THAN 120 MICRONS.

REV.NO.	DESCRIPTION OF REVISIONS	BY	DATE

DR. Poramej	CHK. Nitsha	METROPOLITAN ELECTRICITY AUTHORITY	SCALE 1:1
DIR.DIV.		CABLE ROUTE MARKER FLUSH MOUTED TYPE (TYPE B)	SUPERSEDING
DIR.DEPT.			SH.NO. 2 OF 2
DEP.GOV.			DWG. NO. 10A4–0445
DATE 5/7/2543			

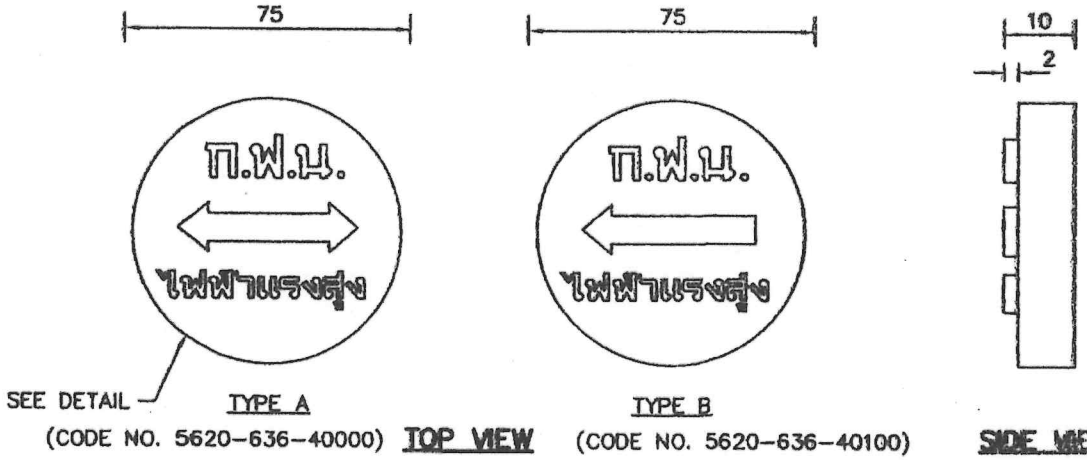

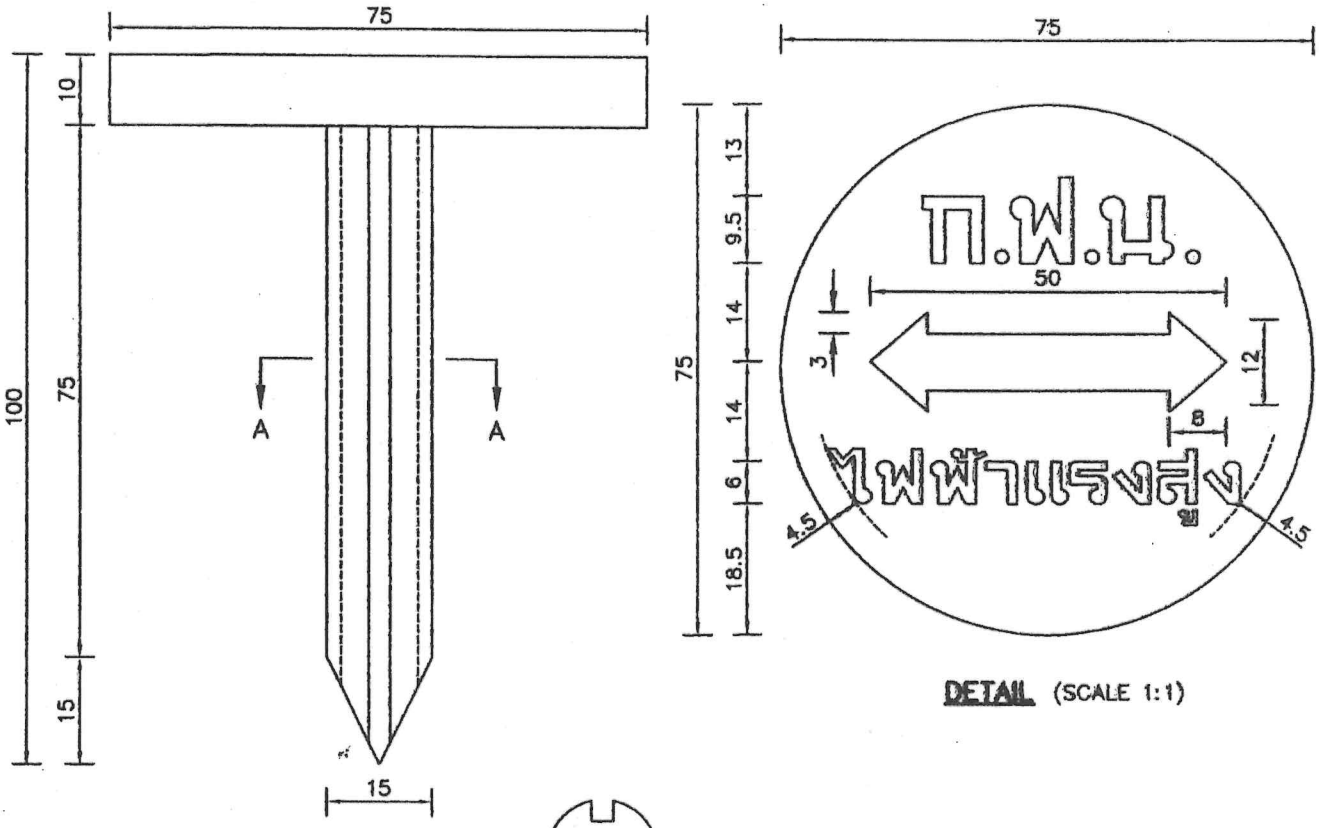

NOTES

1. DIMENSIONS ARE IN mm.
2. MATERIAL : GREY CAST IRON AS PER TIS. 536 OR EQUIVALENT.
3. PROTECTIVE COATING : ALL SURFACES SHALL BE COATED WITH COAL TAR EPOXY.
4. SEE MEA'S SPECIFICATION FOR FURTHER INFORMATION.

REV.NO.	DESCRIPTION OF REVISIONS	BY	DATE
1	REVISED NOTE 2 & ADDED NOTE 3 & 4	Monthol	29/1/58

DR. Paramy	CHK.	METROPOLITAN ELECTRICITY AUTHORITY	SCALE 1:1 , NONE
DIR.DIV.		CABLE ROUTE MARKER	SUPERSEDING
DIR.DEPT.			SH.NO. 1 OF 5
DEP.GOV.		(FLUSH-MOUNTED TYPE)	DWG. NO. UG-9-012
DATE 15/3/2543			

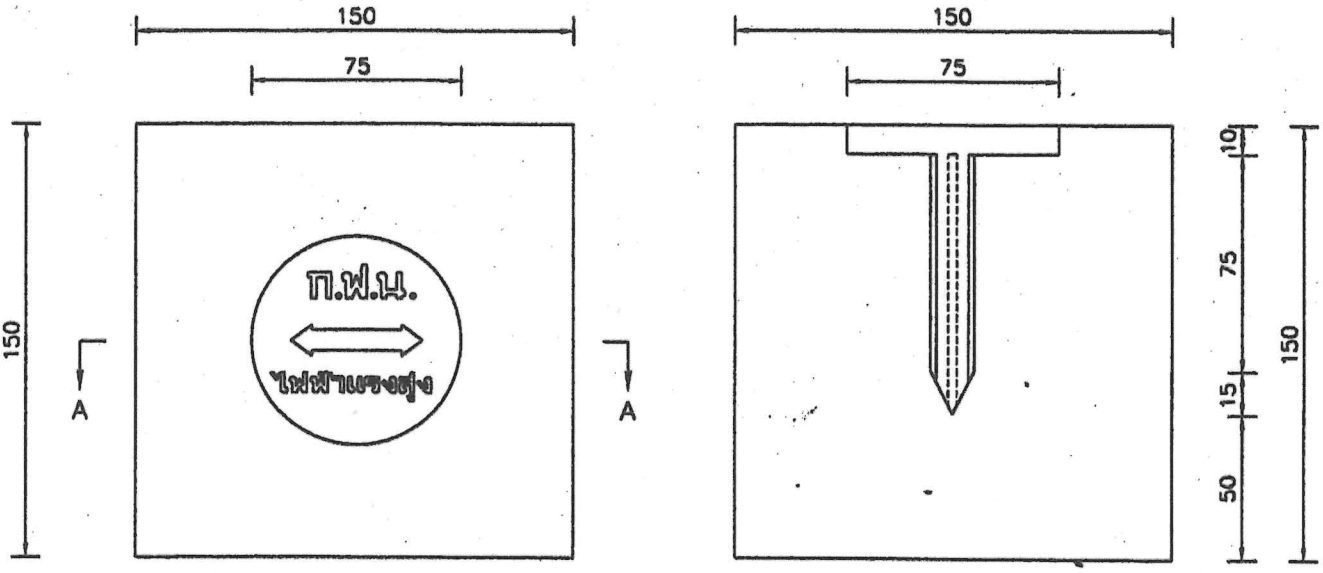

PLAN VIEW

SECTION A–A

CONCRETE CUBE FOR SIDEWALK OR CRUSHED ROCK YARD AREA

INSTALLATION

1. CHECK THE UG. CABLE ROUTE AND MARK IT BEFORE REPAIRING THE SURFACE AREA.
2. CAST THE CONCRETE CUBE SIZE 150 x 150 x 150 mm. AND PRESS THE ROUTE MARKER ONTO IT.
3. EVERY 10 m. INTERVAL, FLUSH MOUNT THE CONCRETE CUBE WITH ROUTE MARKER ON THE CENTER LINE OF UG. CABLE ROUTE. THE SURFACE OF CUBE SHALL BE ADJUSTED TO THE SAME LEVEL AS REPAIRED SURFACE.
4. FINISH THE SURFACE AROUND THE CONCRETE CUBE SIMILAR TO THE NEARBY SURFACE.

FOR CONSTRUCTION REFERENCE ONLY

NOTES

1. DIMENSIONS ARE IN mm.
2. THE DRAWING SHOWN ABOVE IS TYPICAL INSTALLATION FOR TYPE A CABLE ROUTE MARKER.
3. IT CAN BE APPLIED IN SUBSTATION AREA BY PLACING THE CONCRETE CUBE FOR EVERY 5 m. (MAX.)

REV.NO.	DESCRIPTION OF REVISIONS	BY	DATE
1	ADD NOTE 3	Pongsan	7/5/2545

DR. Poramej	CHK. Nitcha	METROPOLITAN ELECTRICITY AUTHORITY	SCALE NONE
DIR.DIV. Ratanarojana		CABLE ROUTE MARKER (FLUSH–MOUNTED TYPE)	SUPERSEDING
DIR.DEPT.			SH.NO. 2 OF 5
DEP.GOV.			DWG. NO. UG–9–012
DATE 15/3/2543			

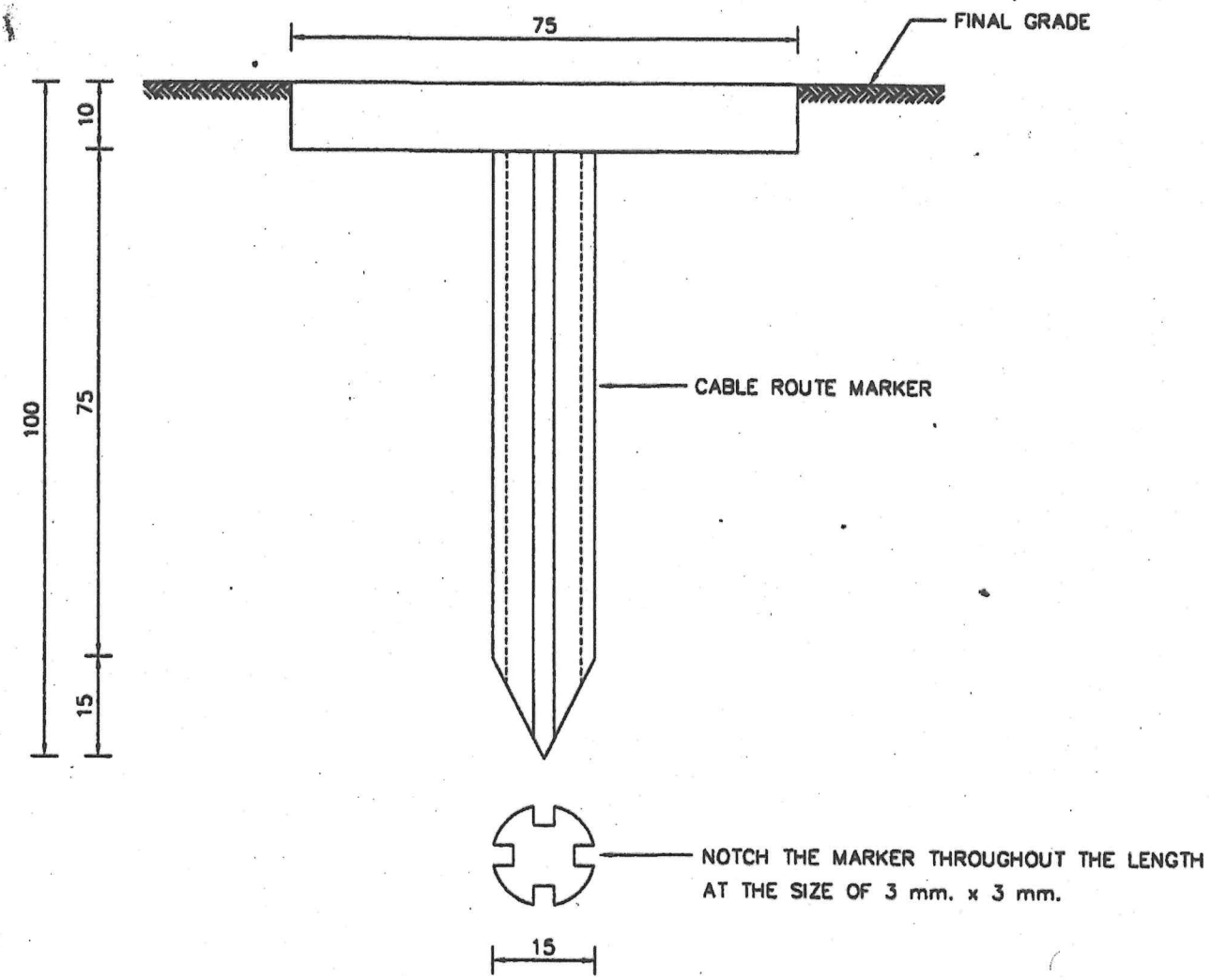

FOR UNFINISHED CONCRETE ROADWAY

INSTALLATION

1. CHECK THE UG. CABLE ROUTE AND MARK IT BEFORE REPAIRING THE ROAD SURFACE.
2. FILL CONCRETE TO REPAIR THE ROAD SURFACE AND SWEEP IT TO THE SAME LEVEL AS THE NEARBY SURFACE.
3. EVERY 10 m. INTERVAL, WHEN THE CONCRETE NEARLY TAKES THE INITIAL SET, WEDGE THE ROUTE MARKER IN THE CENTER LINE OF UG. CABLE ROUTE UNTIL THE HEAD IS FLUSH TO THE ROAD SURFACE.
4. FINISH THE SURFACE AROUND THE ROUTE MARKER SIMILAR TO THE NEARBY SURFACE.

FOR CONSTRUCTION REFERENCE ONLY

NOTES.

1. DIMENSIONS ARE IN mm.
2. IT CAN BE APPLIED IN SUBSTATION AREA BY PLACING THE ROUTE MARKER FOR EVERY 5 m. (MAX.)

REV.NO.	DESCRIPTION OF REVISIONS	BY	DATE
1	ADD NOTE 2	Pongsan	7/5/2545

DR. Poramy	CHK. Nitcha	METROPOLITAN ELECTRICITY AUTHORITY	SCALE 1:1
DIR.DIV. Ratnarajana		CABLE ROUTE MARKER (FLUSH-MOUNTED TYPE)	SUPERSEDING
DIR.DEPT.			SH.NO. 3 OF 5
DEP.GOV. Jari			DWG. NO. UG-9-012
DATE 15/3/2543			

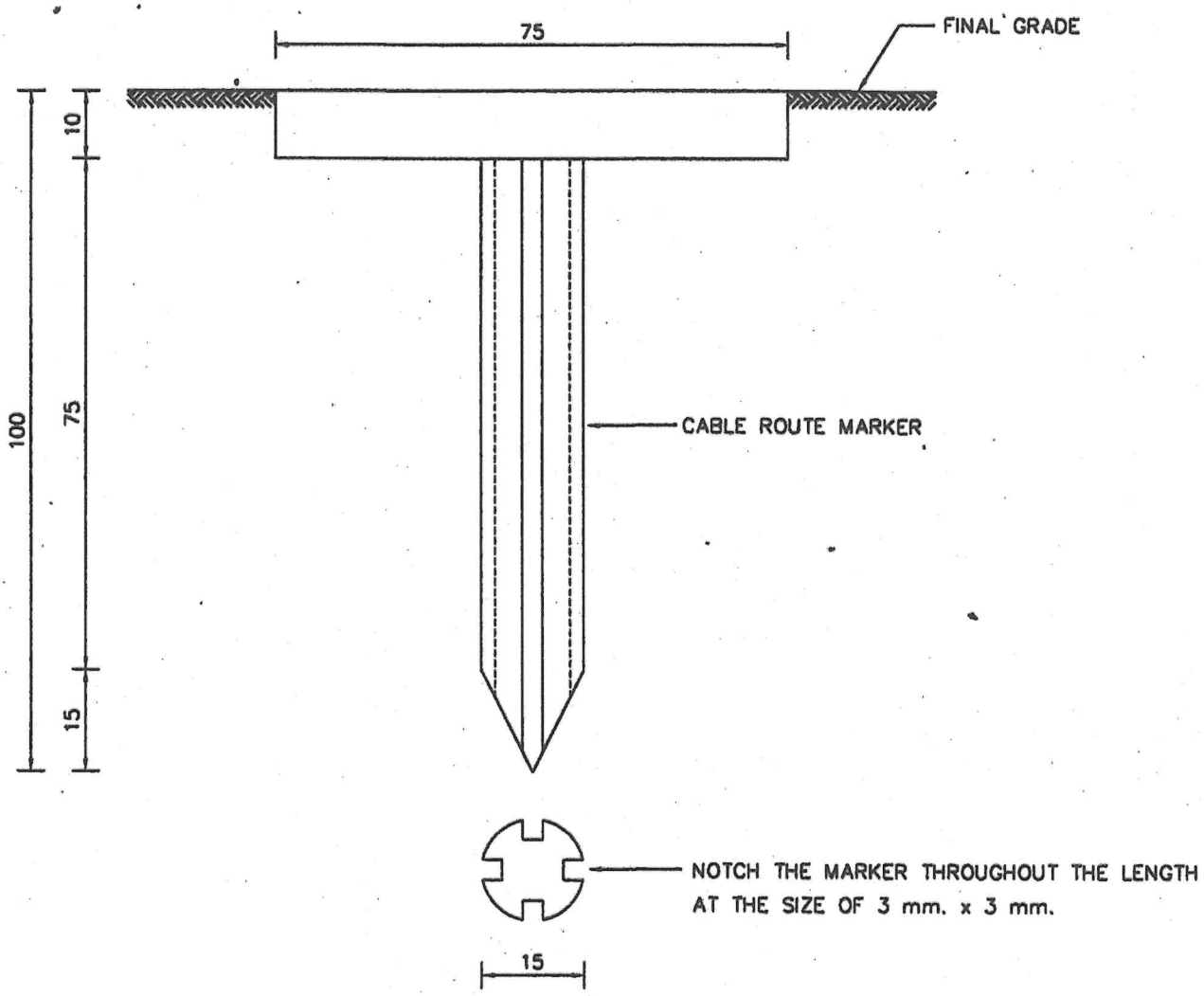

FOR UNFINISHED ASPHALT ROADWAY

INSTALLATION

1. CHECK THE UG. CABLE ROUTE AND MARK IT BEFORE REPAIRING THE ROAD SURFACE.
2. COVER THE ROAD SURFACE WITH ASPHALT.
3. MAKE THE FIRST PRESSING ON ASPHALT SURFACE.
4. EVERY 10 m. INTERVAL, WEDGE THE ROUTE MARKER IN THE CENTER LINE OF UG. CABLE ROUTE UNTIL THE HEAD IS FLUSH TO THE ROAD SURFACE.
5. PRESS THE ASPHALT SURFACE WITH ROUTE MARKER AGAIN.

FOR CONSTRUCTION REFERENCE ONLY

NOTES

1. DIMENSIONS ARE IN mm.
2. IT CAN BE APPLLED IN SUBSTATION AREA BY PLACING THE ROUTE MARKER FOR EVERY 5 m. (MAX.)

REV.NO.	DESCRIPTION OF REVISIONS	BY	DATE
1	ADD NOTE 2	Pongsan	7/5/45

DR. Poramej	CHK. Wisthe	METROPOLITAN ELECTRICITY AUTHORITY	SCALE 1:1
DIR.DIV. Ratanarojana		CABLE ROUTE MARKER (FLUSH-MOUNTED TYPE)	SUPERSEDING
DIR.DEPT. Uggo			SH.NO. 4 OF 5
DEP.GOV. Jari			DWG. NO. UG-9-012
DATE 15/3/2543			

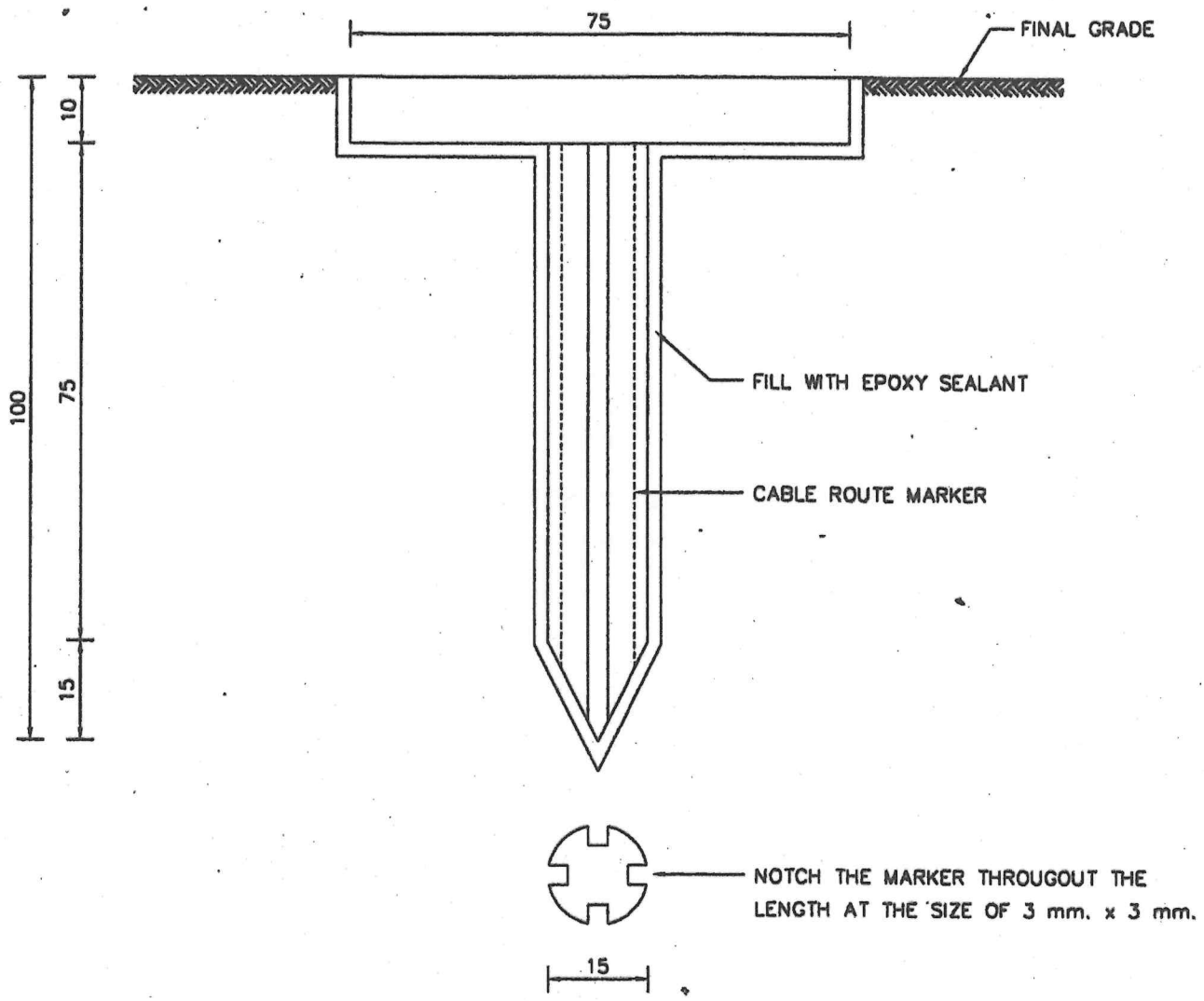

FOR FINISHED CONCRETE OR ASPHALT ROADWAY

INSTALLATION

1. CHECK THE UG. CABLE ROUTE AND MARK IT.
2. EVERY 10 m. INTERVAL, DRILL ø25 mm. AND 100 mm. DEEP HOLE ON THE ROAD SURFACE IN THE CENTER LINE OF UG. CABLE ROUTE.
3. ENLARGE THE HOLE AT THE ROAD SURFACE TO BE ø85 mm. AND 10 mm. IN DEPTH.
4. PUT THE ROUTE MARKER INTO THE HOLE UNTIL THE HEAD IS FLUSH TO THE ROAD SURFACE.
5. FILL THE EPOXY INTO THE HOLE.
6. FINISH THE SURFACE AROUND THE ROUTE MARKER SIMILAR TO THE NEARBY SURFACE.

NOTES

1. DIMENSIONS ARE IN mm.
2. IT CAN BE APPLLED IN SUBSTATION AREA BY PLACING THE ROUTE MARKER FOR EVERY 5 m. (MAX.)

FOR CONSTRUCTION REFERENCE ONLY

REV.NO.	DESCRIPTION OF REVISIONS	BY	DATE
1	ADD NOTE 2	Pongsan	7/5/45

DR. Poramej	CHK. Nitthe	METROPOLITAN ELECTRICITY AUTHORITY	SCALE 1:1
DIR.DIV. Ratana vojana		CABLE ROUTE MARKER (FLUSH-MOUNTED TYPE)	SUPERSEDING
DIR.DEPT.			SH.NO. 5 OF 5
DEP.GOV.			DWG. NO. UG-9-012
DATE 15/3/2543			

CASE 1 FOR UNFINISHED OR FINISHED CONCRETE/ASPHALT SURFACE PAVEMENT

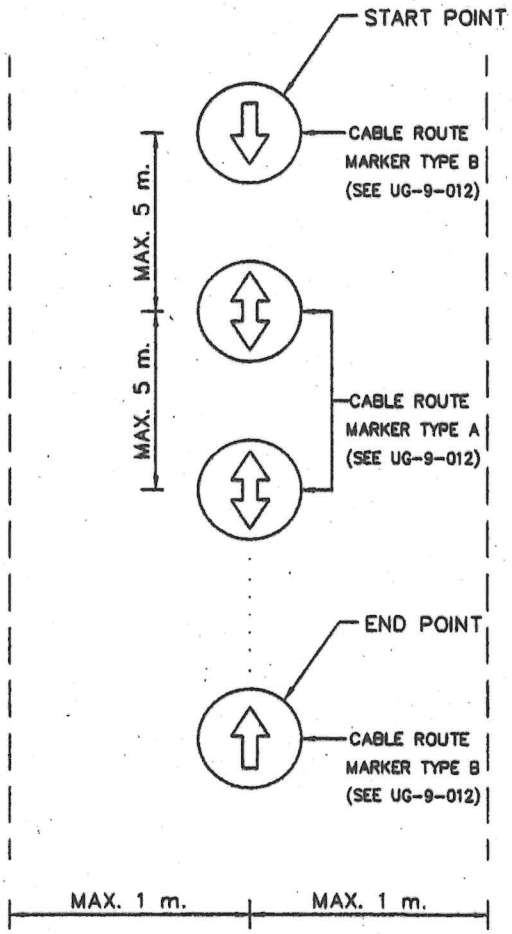

CENTER LINE OF DUCT BANK OR TRENCH

FIG. A

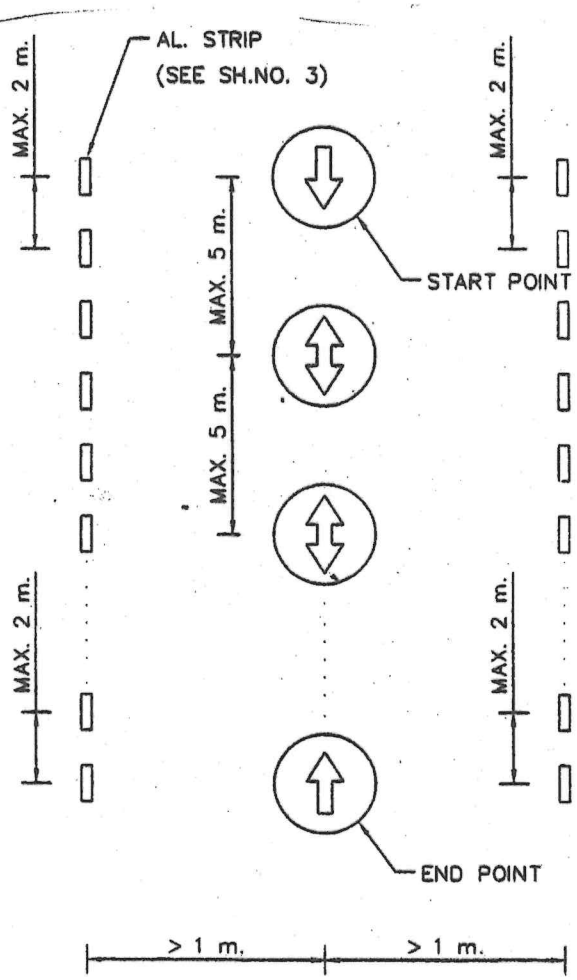

CENTER LINE OF DUCT BANK OR TRENCH

FIG. B

NOTES.

1. REGULATION : DO NOT TAKE FOLLOWING OPERATIONS : DIGGING, DRILLING, CARVING, PUNCHING ETC. IN THE BOUNDARY WHICH IS INDICATED BY CABLE ROUTE MARKER WITHOUT PRIOR WRITTEN PERMISSION OF AUTHORIZED PERSON.
2. APPLICATION – USE FIG.A WHERE DUCT BANK/TRENCH WIDTH NOT MORE THAN 2 m.
   – USE FIG.B WHERE DUCT BANK/TRENCH WIDTH MORE THAN 2 m.

REV.NO.	DESCRIPTION OF REVISIONS	BY	DATE

DR. Meechai	CHK. Pongsan	METROPOLITAN ELECTRICITY AUTHORITY	SCALE NONE
DIR.DIV. R. Thavi		RECOMMENDED PRACTICE FOR INDICATING UNDERGROUND CABLE ROUTE IN SUBSTATION	SUPERSEDING
DIR.DEPT. A. Meawad			SH.NO. 1 OF 3
DEP.GOV.			DWG. NO. UG-9-013
DATE 13/5/2545			

CASE 2 FOR CRUCHED – ROCK AREA (YARD)

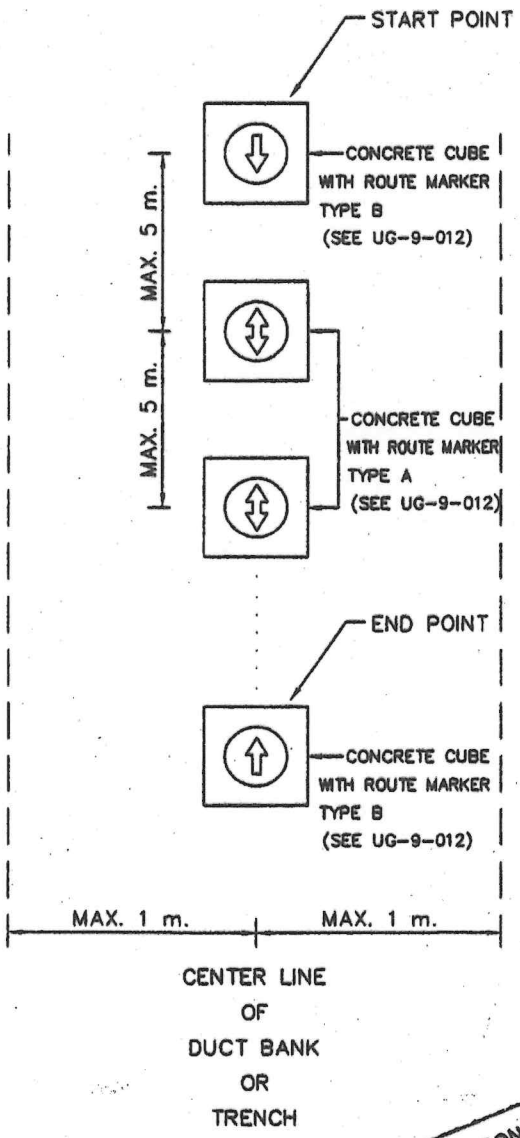

FIG. A

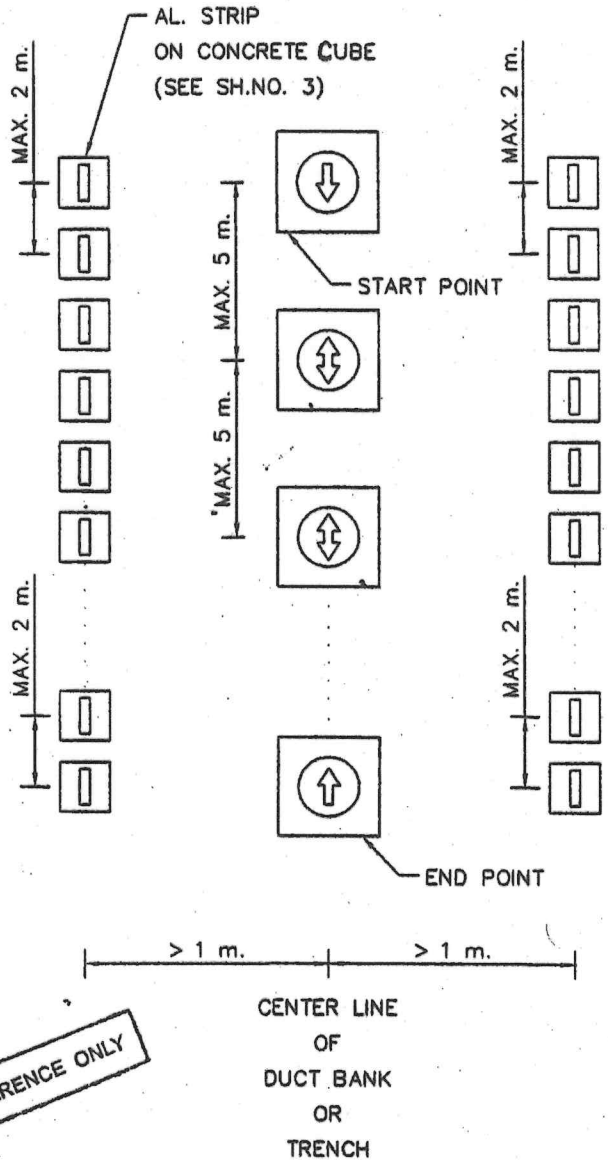

FIG. B

FOR CONSTRUCTION REFERENCE ONLY

NOTES.

1. REGULATION : DO NOT TAKE FOLLOWING OPERATIONS : DIGGING, DRILLING, CARVING, PUNCHING ETC. IN THE BOUNDARY WHICH IS INDICATED BY CABLE ROUTE MARKER WITHOUT PRIOR WRITTEN PERMISSION OF AUTHORIZED PERSON.
2. APPLICATION – USE FIG.A WHERE DUCT BANK/TRENCH WIDTH NOT MORE THAN 2 m.
   – USE FIG.B WHERE DUCT BANK/TRENCH WIDTH MORE THAN 2 m.

REV.NO.	DESCRIPTION OF REVISIONS	BY	DATE

DR. Meechai	CHK. Pongsan	METROPOLITAN ELECTRICITY AUTHORITY	SCALE NONE
DIR.DIV. R. Thavi		RECOMMENDED PRACTICE FOR INDICATING UNDERGROUND CABLE ROUTE IN SUBSTATION	SUPERSEDING
DIR.DEPT.			SH.NO. 2 OF 3
DEP.GOV.			DWG. NO. UG-9-013
DATE 13/5/2545			